UNIVERSITAS
GADJAH MADA
**Pompa Pulp Pada Proses Bleacing Clorinasi**
Joko Sabar , Ir. Hermawan, M.Si.
**Universitas Gadjah Mada, 1998 | Diunduh dari http://etd.repository.ugm.ac.id/**

# DAFTAR PUSTAKA

Anonim, Ebara Corp., Selection, Operation and Maintenance of Pump, Ebara Corporation, Tokyo

Anonim, 1981, SKF General Catalogue, Printed in Sweden by Erlanders

Casay J., P., 1960, Pulp and Paper, Chemistry and Chemical Technology, Volume I, Pulping and Bleacing, Second Edition, Interscience Publishers, Inc. New York

Church, A., H., Harahap Zulkifli, 1986, Pompa dan Blower Sentrifugal, Erlangga, Jakarta

Deutschman A., D., 1975, Machine Design, Mac Millan Company, New York

Dietzel, F., Sriyono Dakso, Turbin Pompa dan Kompresor, Erlangga, Jakarta

Edwards, H., 1971, Teknologi Pemakaian Pompa, Erlangga, Jakarta

Hartanto N., S., Sato G Takeshi, 1992, Menggambar Mesin Menurut Standar ISO, Pradnya Paramita, Jakarta

Higdon, A., 1976, Mechanics of Materials, John Wiley and Sons, New York

Karassik, I., J., 1976, Pump HandBook, McGraw- Hill Book Company, New York

Khetagurov, M., Marine Auxiliary and System Peace Publishers, Moscow

Khurmi, R., S., 1980, A Text Book of Machine Design, Eurasia Publishing House Ltd., New Delhi

Lazarkiewicz, S., 1965, Impeller Pumps, Pergamon Press Ltd

Pompa Pulp Pada Proses Bleacing Clorinasi
Joko Sabar , Ir. Hermawan, M.Si.
Universitas Gadjah Mada, 1998 | Diunduh dari http://etd.repository.ugm.ac.id/

Malev V., L., 1939, Machine Design, International Text Book company, Scranton

Matley Jay, 1979, Fluid Movers, McGraw-Hill Pub. Co., New York

Sigley J.,E., 1986, Mechanical Engineering Design, McGraw-Hill Book Company, New York

Stepanoff, A.,J., 1957, Centrifugal and Axial Flow Pumps, $2_{nd}$ Edition, John Willey and Sons, New York

Sularso, Suga Kiyokatsu, 1978, Dasar Perencanaan dan Pemilihan Elemen Mesin, Pradnya Paramita, Jakarta

Sularso, Tahara Haruo, 1983, Pompa dan Kompresor, Pradnya Paramita, Jakarta

White, F., M., 1988, Mekanika Fluida, Jilid 1, Erlangga, Jakarta

UNIVERSITAS
GADJAH MADA

**Pompa Pulp Pada Proses Bleacing Clorinasi**
Joko Sabar , Ir. Hermawan, M.Si.
**Universitas Gadjah Mada, 1998 | Diunduh dari http://etd.repository.ugm.ac.id/**

# LAMPIRAN

Pompa Pulp Pada Proses Bleacing Clorinasi
Joko Sabar , Ir. Hermawan, M.Si.
Universitas Gadjah Mada, 1998 | Diunduh dari http://etd.repository.ugm.gc.id/

# LSTROM MACHINERY
# )DUCT SPECIFICATION

| | |
|---|---|
| Description | APP42-150 |
| Serial Number | 95 119767 |
| Time of delivery/EXW | 9534 |
| Date printed | 21.06.95 |



ner
IDAH KIAT PULP & PAPER

SIA

order # 312-A-0626
PO Line #
y code ID

Ahlstrom Pte Ltd

9 Scotts Road
10-01/03 Pacific Plaza
SINGAPORE 0922

Equipment No 312-A-0644

## C E S S D A T A

| | | | |
|---|---|---|---|
| liquid | PULP | Efficiency | 79,7 % |
| ty Q | 133,3 l/s | Pump rotational speed | 1470 1/min |
| | 30 m | Motor power | 55 kW |
| ower P | 50 kW | Version | 06 |
| ump power | 50 kW | Pump Size | APP42-150 |

| | | | |
|---|---|---|---|
| r | Ahlstrom Mantta | Shaft material | SS2324 |
| | 06 | Gasket Material | Klinger SIL C-4430 |
| ze | APP42-150 | O-ring Material | NBR |
| eristic curve | "1500" rpm | Flange Drilling | ISO 2084 PN 10 |
| r Type | Closed | Bearing unit supplied by | Ahlstrom production unit |
| r No. | 283921 | Bearing Unit Lubrication | Grease lubrication |
| r Dia. | 340 mm | Measuring stud 699 | Yes |
| r turning angle | 9 o | Shaft Seal Fitting | P02 |
| Material | A890 3A | | |

## T I N G

| | |
|---|---|
| | E180/3-Fe Sa2 1/2 SFS4962 |
| ade | NCS 1700 |

| | | | |
|---|---|---|---|
| erson | CHIA SOO MENG | LBU Order # | ASI/125/95 |
| Pte Ltd | | LBU Position | 4 |
| | | Telephone | |
| Road | | | |

UNIVERSITAS
GADJAH MADA

**Pompa Pulp Pada Proses Bleacing Clorinasi**
Joko Sabar , Ir. Hermawan, M.Si.
**Universitas Gadjah Mada, 1998 | Diunduh dari http://etd.repository.ugm.ac.id/**

# Lampiran 1. Data-data perencanaan

Sumber : PT. Indah Kiat Pulp and Paper Corp.

Pompa Pulp Pada Proses Bleacing Clorinasi
Joko Sabar , Ir. Hermawan, M.Si.
Universitas Gadjah Mada, 1998 | Diunduh dari http://etd.repository.ugm.ac.id/



4. Norden Number

Adalah angka yang menunjukkan kesetaraan suatu filter dengan jumlah filter standar yang dipasang counter current untuk menghasilkan pulp dengan tingkat kebersihan pulp yang sama.

Nordin Number untuk:
Vacuum Drum Washer= 2.5 - 4
Single Stage Diffuser= 3 - 5
Kamyr Digester - hr wash= 7 - 11
Pressure Washer= 3 - 6

Semakin besar Norden Number berarti semakin bagus filter tersebut.

## III. BLEACHING

### Chlorinasi

Tujuan:
Memisahkan lignin dari serat (delignifikasi) dengan memakai $Cl_2$.
Kondisi proses:

- Temperaturnya sama dengan temperatur udara luar
- Konsistensi sekitar 3 - 5%
- Waktu reaksi antara 1 sampai 2
- Banyaknya pemakaian tergantung dari Kappa Number, yaitu dengan menggunakan istilah Kappa Factor

$$\text{Kappa Number} = \frac{\%\ \text{Chlorine yang dipakai}}{\text{Kappa Number}}$$

Sistim lama Kappa Factor antara 0.2 sampai 0.25
Untuk sistim baru dengan memakai substitusi $ClO_2$
Kappa Factor antara 0.1 sampai 0.15

Sewaktu $Cl_2$ bereaksi dengan lignin $Cl_2$ akan mengalami perubahan sebagai berikut:
Reaksi substitusi= $Cl_2 \rightarrow OCl^- + Cl^-$
Reaksi oksidasi= $Cl_2 \rightarrow 2Cl^-$

Dan lignin akan berubah menjadi chlorolignin.
$Cl_2$ dapat juga bereaksi dengan selulosa yang mengakibatkan degradasi dari selulosa tersebut. Reaksinya adalah:

$Cl_2 \rightarrow 2Cl^*$
$HCLO \rightarrow Cl^* + HO^*$
$2HCLO \rightarrow H_2O + CLO_2$
$CLO_2 \rightarrow CLO^* + CL^*$
$CL_2$ dapat membentuk senyawa HCLO yang merusak serat
$Cl_2 + H_2O \rightarrow HCLO + H^+ + Cl^-$

**Sumber : PT. Indah Kiat Pulp and Paper Corp.**

Pompa Pulp Pada Proses Bleacing Clorinasi
Joko Sabar , Ir. Hermawan, M.Si.
Universitas Gadjah Mada, 1998 | Diunduh dari http://etd.repository.ugm.ac.id/

# Lampiran 3. Lamjutan

| Temperature °C. | Temperature °F. | Specific gravity | $NaClO_3$, % | Lb. $NaClO_3$/ gal. of sol. | Gal. $H_2O$ to dissolve 1 lb. $NaClO_2$ |
|---|---|---|---|---|---|
| −15 | 5 | 1.380 | 43.1 | 4.95 | 0.167 |
| 0 | 32 | 1.390 | 44.0 | 5.09 | 0.152 |
| 20 | 68 | 1.430 | 50.4 | 6.0 | 0.115 |
| 40 | 104 | 1.472 | 56.0 | 6.87 | 0.0932 |
| 60 | 140 | 1.515 | 61.6 | 7.78 | 0.073 |
| 80 | 176 | 1.558 | 66.8 | 8.68 | 0.0598 |
| 100 | 212 | 1.600 | 71.5 | 9.54 | 0.0474 |

| | | | | |
|---|---|---|---|---|
| Hypochlorite, % | 1.5 | 1.0 | 0.5 | 0 |
| Brightness, G.E. | 69 | 62 | 46 | — |
| Viscosity, cps. | 130 | 171 | 219 | 234 |
| $ClO_2$, % | 0.5 | 0.5 | 0.5 | 0.75 |
| Brightness, G.E. | 88 | 86 | 78 | 66 |
| Viscosity, cps. | 123 | 184 | 215 | 230 |
| NaOH, % | 0.5 | 0.5 | 0.5 | 0.5 |
| Brightness, G.E. | 84 | 83 | 75 | 66 |
| Viscosity, cps. | 114 | 157 | 190 | 220 |
| $ClO_2$, % | 0.2 | 0.2 | 0.4 | 0.5 |
| Brightness, G.E. | 92 | 92 | 92 | 88 |
| Viscosity, cps. | 102 | 142 | 171 | 188 |
| Aged brightness, G.E. (1 hr. at 105°C.) | 88 | 88 | 88 | 86 |

Sumber : James, 1960

UNIVERSITAS
GADJAH MADA
**Pompa Pulp Pada Proses Bleacing Clorinasi**
Joko Sabar , Ir. Hermawan, M.Si.
**Universitas Gadjah Mada, 1998 | Diunduh dari http://etd.repository.ugm.ac.id/**

Lampiran 4. Kerugian gesekan untuk bubur kertas paa pipa baja ukuran 10 in.

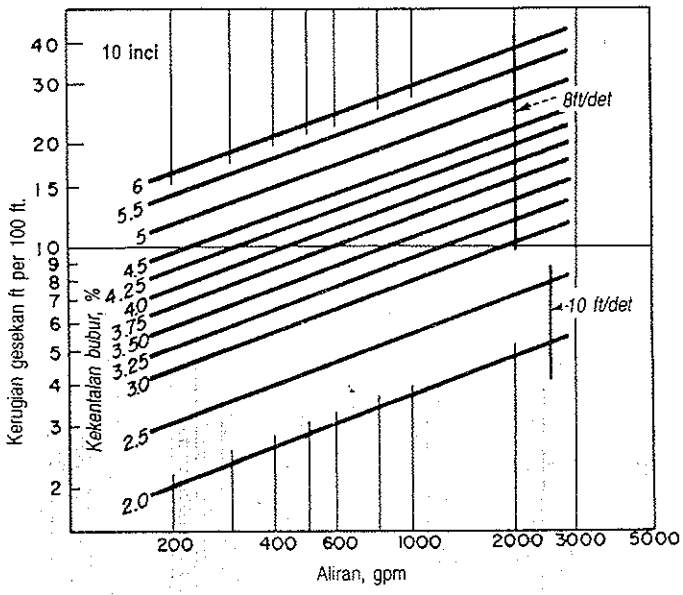


Sumber : Hicks Edwards, 1971

**Pompa Pulp Pada Proses Bleacing Clorinasi**
Joko Sabar , Ir. Hermawan, M.Si.
**Universitas Gadjah Mada, 1998 | Diunduh dari http://etd.repository.ugm.ac.id/**

# Lampiran 5. Kerugian gesek pada instalasi pipa

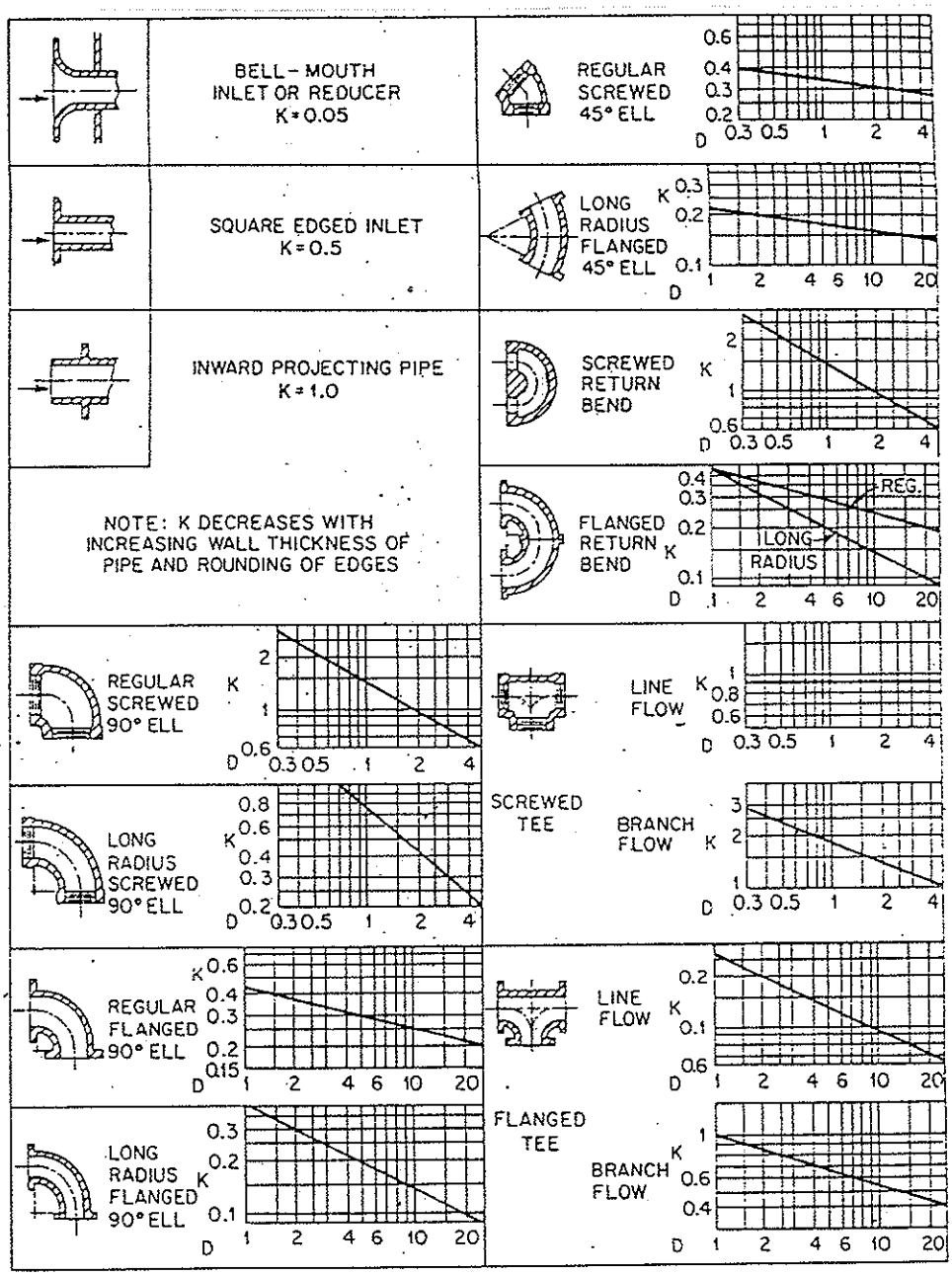


$$h = K \frac{V^2}{2g} \text{ FEET OF FLUID}$$

Sumber : Karassik, 1976

**Pompa Pulp Pada Proses Bleacing Clorinasi**
Joko Sabar , Ir. Hermawan, M.Si.
**Universitas Gadjah Mada, 1998 | Diunduh dari http://etd.repository.ugm.gc.id/**

# Lampiran 7. Dimensi utama pasak

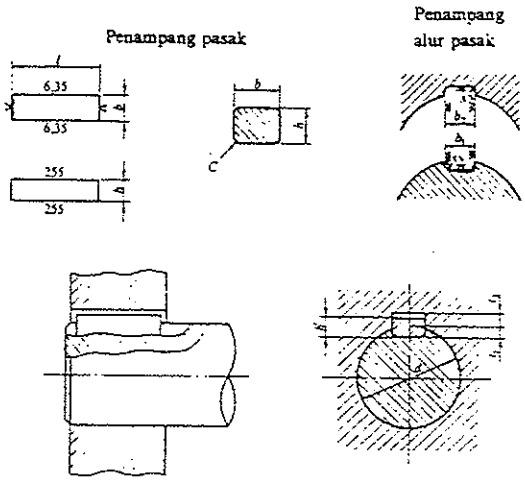


Ukuran-ukuran utama

(Satuan : mm)

| Ukuran nominal pasak $b \times h$ | Ukuran standar $b$, $b_1$, dan $b_2$ | Ukuran standar $h$: Pasak prismatis / Pasak luncur | Pasak tirus | $C$ | $l$* | Ukuran Standar $r_1$ | Ukuran standar $r_2$: Pasak prismatis | Pasak luncur | Pasak tirus | $r_3$ dan $r_4$ | Referensi: Diameter poros yang dapat dipakai $d$** |
|---|---|---|---|---|---|---|---|---|---|---|---|
| 2 × 2 | 2 | 2 | | 0,16–0,25 | 6–20 | 1,2 | 1,0 | | 0,5 | 0,08–0,16 | Lebih dari 6–8 |
| 3 × 3 | 3 | 3 | | | 6–36 | 1,8 | 1,4 | | 0,9 | | " 8–10 |
| 4 × 4 | 4 | 4 | | | 8–45 | 2,5 | 1,8 | | 1,2 | | " 10–12 |
| 5 × 5 | 5 | 5 | | | 10–56 | 3,0 | 2,3 | | 1,7 | | " 12–17 |
| 6 × 6 | 6 | 6 | | | 14–70 | 3,5 | 2,8 | | 2,2 | | " 17–22 |
| (7 × 7) | 7 | 7 | 7,2 | 0,25–0,40 | 16–80 | 4,0 | 3,0 | 3,5 | 3,0 | 0,16–0,25 | " 20–25 |
| 8 × 7 | 8 | 7 | | | 18–90 | 4,0 | 3,3 | | 2,4 | | " 22–30 |
| 10 × 8 | 10 | 8 | | | 22–110 | 5,0 | 3,3 | | 2,4 | | " 30–38 |
| 12 × 8 | 12 | 8 | | | 28–140 | 5,0 | 3,3 | | 2,4 | | " 38–44 |
| 14 × 9 | 14 | 9 | | | 36–160 | 5,5 | 3,8 | | 2,9 | | " 44–50 |
| (15 × 10) | 15 | 10 | 10,2 | 0,40–0,60 | 40–180 | 5,0 | 5,0 | 5,5 | 5,0 | 0,25–0,40 | " 50–55 |
| 16 × 10 | 16 | 10 | | | 45–180 | 6,0 | 4,3 | | 3,4 | | " 50–58 |
| 18 × 11 | 18 | 11 | | | 50–200 | 7,0 | 4,4 | | 3,4 | | " 58–65 |
| 20 × 12 | 20 | 12 | | | 56–220 | 7,5 | 4,9 | | 3,9 | | " 65–75 |
| 22 × 14 | 22 | 14 | | | 63–250 | 9,0 | 5,4 | | 4,4 | | " 75–85 |
| (24 × 16) | 24 | 16 | 16,2 | 0,60–0,80 | 70–280 | 8,0 | 8,0 | 8,5 | 8,0 | 0,40–0,60 | " 80–90 |
| 25 × 14 | 25 | 14 | | | 70–280 | 9,0 | 5,4 | | 4,4 | | " 85–95 |
| 28 × 16 | 28 | 16 | | | 80–320 | 10,0 | 6,4 | | 5,4 | | " 95–110 |
| 32 × 18 | 32 | 18 | | | 90–360 | 11,0 | 7,4 | | 6,4 | | " 110–130 |

* $l$ harus dipilih dari angka-angka berikut sesuai dengan daerah yang bersangkutan dalam tabel.
6, 8, 10, 12, 14, 16, 18, 20, 22, 25, 28, 32, 36, 40, 45, 50, 56, 63, 70, 80, 90, 100, 110, 125, 140, 160, 180, 200, 220, 250, 280, 320, 360, 400.

Sumber : Sularso, 1978

Pompa Pulp Pada Proses Bleacing Clorinasi
Joko Sabar , Ir. Hermawan, M.Si.
Universitas Gadjah Mada, 1998 | Diunduh dari http://etd.repository.ugm.gc.id/

# Lampiran 8. Spesifikasi flanged yang digunakan



Attached Table

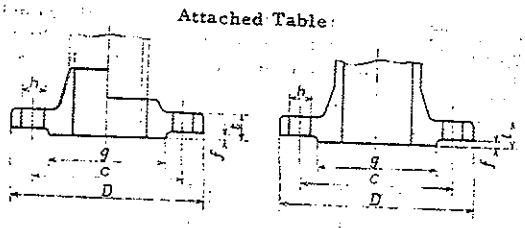


Unit: mm

| Nominal flange size | Outside diameter of steel pipe for welded ends | Outside diameter of flange D | Dimension of flange parts t | f | Bolt holes Diameter g | Diameter of bolt hole C | Number | h | Dimensions of the screw thread of bolt |
|---|---|---|---|---|---|---|---|---|---|
| 10 | 17.3 | 110 | 16 | 1 | 52 | 75 | 4 | 19 | M 16 |
| 15 | 21.7 | 115 | 18 | 1 | 55 | 80 | 4 | 19 | M 16 |
| 20 | 27.2 | 120 | 18 | 1 | 60 | 85 | 4 | 19 | M 16 |
| 25 | 34.0 | 130 | 20 | 1 | 70 | 95 | 4 | 19 | M 16 |
| 32 | 42.7 | 140 | 22 | 2 | 80 | 105 | 4 | 19 | M 16 |
| 40 | 48.6 | 160 | 22 | 2 | 90 | 120 | 4 | 23 | M 20 |
| 50 | 60.5 | 165 | 22 | 2 | 105 | 130 | 8 | 19 | M 16 |
| 65 | 76.3 | 200 | 26 | 2 | 130 | 160 | 8 | 23 | M 20 |
| 80 | 89.1 | 210 | 28 | 2 | 140 | 170 | 8 | 23 | M 20 |
| 90 | 101.6 | 230 | 30 | 2 | 150 | 185 | 8 | 25 | M 22 |
| 100 | 114.3 | 240 | 32 | 2 | 160 | 195 | 8 | 25 | M 22 |
| 125 | 139.8 | 275 | 36 | 2 | 195 | 230 | 8 | 25 | M 22 |
| 150 | 165.2 | 305 | 38 | 2 | 235 | 275 | 12 | 27 | M 24 |
| 200 | 216.3 | 330 | 42 | 2 | 280 | 320 | 12 | 27 | M 24 |
| 250 | 267.4 | 450 | 48 | 2 | 345 | 390 | 12 | 33 | M 30x3 |
| 300 | 318.5 | 515 | 52 | 3 | 405 | 450 | 16 | 33 | M 30x3 |
| 350 | 355.6 | 560 | 54 | 3 | 450 | 495 | 16 | 33 | M 30x3 |
| 400 | 406.4 | 630 | 60 | 3 | 510 | 560 | 16 | 39 | M 36x3 |

Remarks 1. Coupling faces of the flanges shall conform to JIS B 2202. Figures shown above, however, are given for examples of the large raised faces specified in JIS B 2202.

2. Bolt hole diameter (h) shall conform to Grade 3 in JIS B 1001 for the bolts of designation M16, and to Grade 2 in JIS B 1001 for the bolts of designation M 30 x 3 or over.

3. Dimensional tolerances shall conform to JIS B 2203.

Sumber : JIS, 1981

Pompa Pulp Pada Proses Bleacing Clorinasi
Joko Sabar , Ir. Hermawan, M.Si.
Universitas Gadjah Mada, 1998 | Diunduh dari http://etd.repository.ugm.ac.id/

# Lampiran 9. Spesifikasi bantalan bola jenis alur dalam (bantalan kiri)

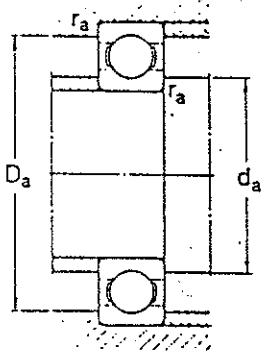


| Dimensions | | | | | Abutment and fillet dimensions | | |
|---|---|---|---|---|---|---|---|
| d | $d_1$ ≈ | $D_1$ ≈ | $D_2$ ≈ | $r_{1,2}$ min | $d_a$ min | $D_a$ max | $r_a$ max |
| mm | | | | | mm | | |
| 45 | 48,7 | 54,3 | – | 0,3 | 47 | 56 | 0,3 |
| | 55 | 65,4 | – | 0,6 | 49 | 71 | 0,6 |
| | 54,7 | 65,6 | 67,8 | 1 | 50 | 70 | 1 |
| | 57,6 | 72,9 | 75,2 | 1,1 | 51,5 | 78,5 | 1 |
| | 62,1 | 83,7 | 86,7 | 1,5 | 53 | 92 | 1,5 |
| | 68,9 | 96,9 | – | 2 | 54 | 111 | 2 |
| 50 | 54,7 | 60,3 | – | 0,3 | 52 | 63 | 0,3 |
| | 60 | 70,4 | – | 0,6 | 54 | 76 | 0,6 |
| | 59,7 | 70,6 | 72,8 | 1 | 55 | 75 | 1 |
| | 62,5 | 78,1 | 81,7 | 1,1 | 56,5 | 83,5 | 1 |
| | 68,7 | 92,1 | 95,2 | 2 | 59 | 101 | 2 |
| | 75,4 | 106 | – | 2,1 | 61 | 119 | 2 |
| 55 | 60,2 | 66,8 | – | 0,3 | 57 | 70 | 0,3 |
| | 67 | 76 | – | 0,6 | 59 | 86 | 0,6 |
| | 66,3 | 79,1 | 81,5 | 1,1 | 61,5 | 83,5 | 1 |
| | 69 | 86,6 | 89,4 | 1,5 | 63 | 92 | 1,5 |
| | 75,3 | 101 | 104 | 2 | 64 | 111 | 2 |
| | 81,5 | 115 | – | 2,1 | 66 | 129 | 2 |
| 60 | 65,6 | 72,4 | – | 0,3 | 62 | 76 | 0,3 |
| | 72 | 83,4 | – | 0,6 | 64 | 91 | 0,6 |
| | 71,3 | 84,1 | 86,5 | 1,1 | 66,5 | 88,5 | 1 |
| | 75,5 | 94,2 | 97 | 1,5 | 68 | 102 | 1,5 |
| | 81,8 | 109 | 113 | 2,1 | 71 | 119 | 2 |
| | 88,1 | 123 | – | 2,1 | 71 | 139 | 2 |
| 65 | 71,1 | 78,9 | – | 0,6 | 69 | 81 | 0,6 |
| | 76,5 | 88,5 | – | 0,6 | 69 | 96 | 0,6 |
| | 76,3 | 89,1 | 91,5 | 1,1 | 71,5 | 93,5 | 1 |
| | 83,3 | 103 | 106 | 1,5 | 73 | 112 | 1,5 |
| | 88,3 | 118 | 122 | 2,1 | 76 | 129 | 2 |
| | 94 | 132 | – | 2,1 | 76 | 149 | 2 |
| 70 | 76,1 | 83,9 | – | 0,6 | 74 | 86 | 0,6 |
| | 83,3 | 97,1 | – | 0,6 | 74 | 106 | 0,6 |
| | 82,8 | 97,6 | 99,9 | 1,1 | 76,5 | 103,5 | 1 |
| | 87 | 109 | 111 | 1,5 | 78 | 117 | 1,5 |
| | 94,9 | 126 | 130 | 2,1 | 81 | 139 | 2 |
| | 103 | 147 | – | 3 | 83 | 167 | 2,5 |

Sumber : SKF, 1981

UNIVERSITAS
GADJAH MADA

**Pompa Pulp Pada Proses Bleacing Clorinasi**
Joko Sabar , Ir. Hermawan, M.Si.
**Universitas Gadjah Mada, 1998 | Diunduh dari http://etd.repository.ugm.ac.id/**

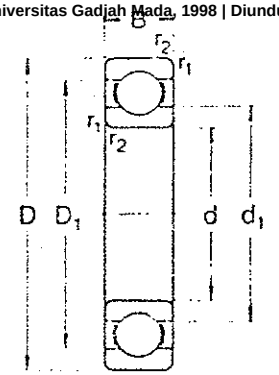


with full outer ring shoulder

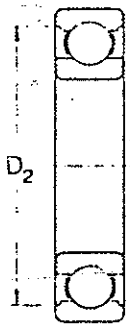


with recessed outer ring shoulder

| Principal dimensions | | | Basic load ratings dynamic | static | Limiting speeds Lubrication grease | oil | Mass | Designation |
|---|---|---|---|---|---|---|---|---|
| d | D | B | C | $C_0$ | | | | |
| mm | | | N | | r min | | kg | – |
| 45 | 58 | 7 | 6 050 | 3 800 | 9 500 | 12 000 | 0.040 | 61809 |
| | 75 | 10 | 15 600 | 9 300 | 9 000 | 11 000 | 0.17 | 16009 |
| | 75 | 16 | 21 200 | 12 200 | 9 000 | 11 000 | 0.25 | 6009 |
| | 85 | 19 | 33 200 | 18 600 | 7 500 | 9 000 | 0.41 | 6209 |
| | 100 | 25 | 52 700 | 30 000 | 6 700 | 8 000 | 0.83 | 6309 |
| | 120 | 29 | 76 100 | 45 500 | 6 000 | 7 000 | 1.55 | 6409 |
| 50 | 65 | 7 | 6 240 | 4 250 | 9 000 | 11 000 | 0.052 | 61810 |
| | 80 | 10 | 16 300 | 10 000 | 8 500 | 10 000 | 0.18 | 16010 |
| | 80 | 16 | 21 600 | 13 200 | 8 500 | 10 000 | 0.26 | 6010 |
| | 90 | 20 | 35 100 | 19 600 | 7 000 | 8 500 | 0.46 | 6210 |
| | 110 | 27 | 61 800 | 36 000 | 6 300 | 7 500 | 1.05 | 6310 |
| | 130 | 31 | 87 100 | 52 000 | 5 300 | 6 300 | 1.90 | 6410 |
| 55 | 72 | 9 | 8 320 | 5 600 | 8 500 | 10 000 | 0.083 | 61811 |
| | 90 | 11 | 19 500 | 12 200 | 7 500 | 9 000 | 0.26 | 16011 |
| | 90 | 18 | 28 100 | 17 000 | 7 500 | 9 000 | 0.39 | 6011 |
| | 100 | 21 | 43 600 | 25 000 | 6 300 | 7 500 | 0.61 | 6211 |
| | 120 | 29 | 71 500 | 41 500 | 5 600 | 6 700 | 1.35 | 6311 |
| | 140 | 33 | 99 500 | 63 000 | 5 000 | 6 000 | 2.30 | 6411 |
| 60 | 78 | 10 | 8 710 | 6 100 | 7 500 | 9 000 | 0.11 | 61812 |
| | 95 | 11 | 19 900 | 13 200 | 6 700 | 8 000 | 0.28 | 16012 |
| | 95 | 18 | 29 600 | 18 300 | 6 700 | 8 000 | 0.42 | 6012 |
| | 110 | 22 | 47 500 | 28 000 | 6 000 | 7 000 | 0.78 | 6212 |
| | 130 | 31 | 81 900 | 48 000 | 5 000 | 6 000 | 1.70 | 6312 |
| | 150 | 35 | 108 000 | 69 500 | 4 800 | 5 600 | 2.75 | 6412 |
| 65 | 85 | 10 | 11 700 | 8 300 | 7 000 | 8 500 | 0.13 | 61813 |
| | 100 | 11 | 21 200 | 14 600 | 6 300 | 7 500 | 0.30 | 16013 |
| | 100 | 18 | 30 700 | 19 600 | 6 300 | 7 500 | 0.44 | 6013 |
| | 120 | 23 | 55 900 | 34 000 | 5 300 | 6 300 | 0.99 | 6213 |
| | 140 | 33 | 92 300 | 56 000 | 4 800 | 5 600 | 2.10 | 6313 |
| | 160 | 37 | 119 000 | 78 000 | 4 500 | 5 300 | 3.30 | 6413 |
| 70 | 90 | 10 | 12 100 | 9 150 | 6 700 | 8 000 | 0.14 | 61814 |
| | 110 | 13 | 28 100 | 19 000 | 6 000 | 7 000 | 0.43 | 16014 |
| | 110 | 20 | 37 700 | 24 500 | 6 000 | 7 000 | 0.60 | 6014 |
| | 125 | 24 | 61 800 | 37 500 | 5 000 | 6 000 | 1.05 | 6214 |
| | 150 | 35 | 104 000 | 63 000 | 4 500 | 5 300 | 2.50 | 6314 |
| | 180 | 42 | 143 000 | 104 000 | 3 800 | 4 500 | 4.85 | 6414 |

Sumber : SKF, 1981

Pompa Pulp Pada Proses Bleacing Clorinasi
Joko Sabar , Ir. Hermawan, M.Si.
Universitas Gadjah Mada, 1998 | Diunduh dari http://etd.repository.ugm.ac.id/

Lampiran 11. Spesifikasi bantalan kontak sudut (bantalan sebelah kanan)

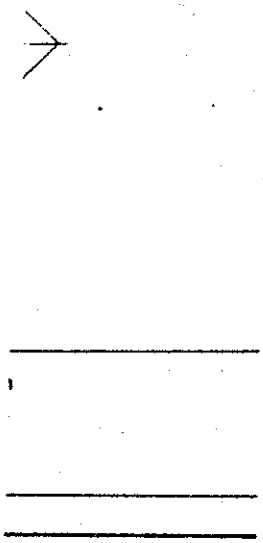

Sumber : SKF, 1981

Sumber : SKF, 1981

Pompa Pulp Pada Proses Bleacing Clorinasi
Joko Sabar , Ir. Hermawan, M.Si.
Universitas Gadjah Mada, 1998 | Diunduh dari http://etd.repository.ugm.ac.id/

# Lampiran 12. Lanjutan

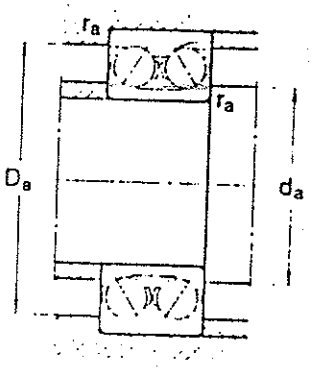


| Dimensions | | | | | Abutment and fillet dimensions | | |
|---|---|---|---|---|---|---|---|
| d | $d_1$ ≈ | $D_1$ ≈ | $r_{1,2}$ min | a | $d_a$ min | $D_a$ max | $r_a$ max |
| mm | | | | | mm | | |
| 60 | 78 | 98,3 | 1.5 | 71 | 69 | 101 | 1.5 |
| | 87.2 | 115 | 2.1 | 86 | 72 | 118 | 2 |
| | 88.8 | 115 | 2.1 | 123 | 72 | 118 | 2 |
| 65 | 83.7 | 105 | 1.5 | 76 | 74 | 111 | 1.5 |
| | 92.5 | 122 | 2.1 | 94 | 77 | 128 | 2 |
| | 93.6 | 125 | 2.1 | 132 | 77 | 128 | 2 |
| 70 | 90.6 | 111 | 1.5 | 81 | 79 | 116 | 1.5 |
| | 99,2 | 131 | 2.1 | 101 | 82 | 138 | 2 |
| | 100 | 134 | 2.1 | 142 | 82 | 138 | 2 |
| 75 | 94,7 | 116 | 1.5 | 84 | 84 | 121 | 1.5 |
| | 106 | 139 | 2,1 | 107 | 87 | 148 | 2 |
| 80 | 102 | 127 | 2 | 91 | 90 | 130 | 2 |
| | 113 | 148 | 2,1 | 112 | 92 | 158 | 2 |
| 85 | 107 | 133 | 2 | 97 | 95 | 140 | 2 |
| | 120 | 157 | 3 | 119 | 99 | 166 | 2.5 |
| 90 | 115 | 143 | 2 | 104 | 100 | 150 | 2 |
| | 128 | 169 | 3 | 125 | 104 | 176 | 2.5 |
| 95 | 124 | 154 | 2,1 | 111 | 107 | 158 | 2 |
| | 135 | 178 | 3 | 133 | 109 | 186 | 2,5 |
| 100 | 129 | 160 | 2,1 | 118 | 112 | 168 | 2 |
| | 142 | 187 | 3 | 139 | 114 | 201 | 2.5 |
| 110 | 143 | 178 | 2.1 | 132 | 122 | 188 | 2 |
| | 155 | 205 | 3 | 153 | 124 | 226 | 2,5 |

Pompa Pulp Pada Proses Bleaching Clorinasi
Joko Sabdo, Ir. Hermawan, M.Si.
Universitas Gadjah Mada, 1998 | Diunduh dari http://etd.repository.ugm.gc.id/

# Lampiran 13. Spesifikasi lock nuts

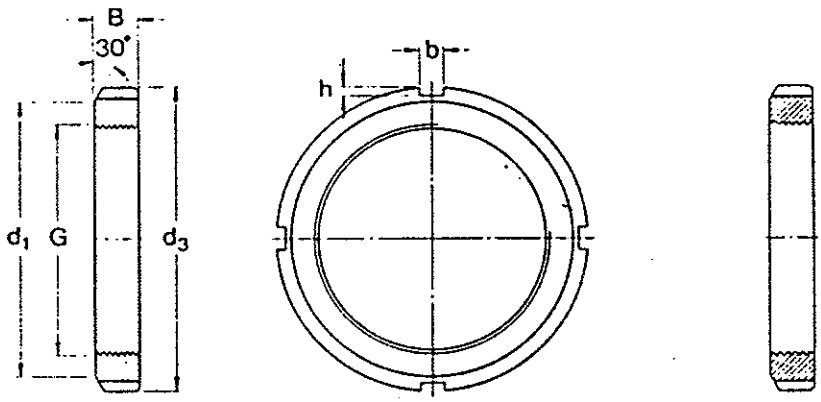


| Dimensions | | | | | | Mass | Designation | Appropriate locking washer | hook impact spanner |
|---|---|---|---|---|---|---|---|---|---|
| G | $d_1$ | $d_3$ | B | b | h | | | | |
| mm | | | | | | kg | - | - | |
| M 10×0,75 | 13,5 | 18 | 4 | 3 | 2 | 0.004 | KM 0 | MB 0 | - |
| M 12×1 | 17 | 22 | 4 | 3 | 2 | 0.007 | KM 1 | MB 1 | - |
| M 15×1 | 21 | 25 | 5 | 4 | 2 | 0.010 | KM 2 | MB 2 | - |
| M 17×1 | 24 | 28 | 5 | 4 | 2 | 0.013 | KM 3 | MB 3 | - |
| M 20×1 | 26 | 32 | 6 | 4 | 2 | 0.019 | KM 4 | MB 4 | HN 4 |
| M 25×1,5 | 32 | 38 | 7 | 5 | 2 | 0.025 | KM 5 | MB 5 | HN 5 |
| M 30×1,5 | 38 | 45 | 7 | 5 | 2 | 0.043 | KM 6 | MB 6 | HN 6 |
| M 35×1,5 | 44 | 52 | 8 | 5 | 2 | 0.053 | KM 7 | MB 7 | HN 7 |
| M 40×1,5 | 50 | 58 | 9 | 6 | 2.5 | 0.085 | KM 8 | MB 8 | HN 8 |
| M 45×1,5 | 56 | 65 | 10 | 6 | 2,5 | 0,12 | KM 9 | MB 9 | HN 9 |
| M 50×1,5 | 61 | 70 | 11 | 6 | 2.5 | 0.15 | KM 10 | MB 10 | HN 10 |
| M 55×2 | 67 | 75 | 11 | 7 | 3 | 0.16 | KM 11 | MB 11 | HN 11 |
| M 60×2 | 73 | 80 | 11 | 7 | 3 | 0,17 | KM 12 | MB 12 | HN 12 |
| M 65×2 | 79 | 85 | 12 | 7 | 3 | 0,20 | KM 13 | MB 13 | HN 13 |
| M 70×2 | 85 | 92 | 12 | 8 | 3.5 | 0.24 | KM 14 | MB 14 | HN 14 |
| M 75×2 | 90 | 98 | 13 | 8 | 3.5 | 0.29 | KM 15 | MB 15 | HN 15 |
| M 80×2 | 95 | 105 | 15 | 8 | 3.5 | 0.40 | KM 16 | MB 16 | HN 16 |
| M 85×2 | 102 | 110 | 16 | 8 | 3.5 | 0,45 | KM 17 | MB 17 | HN 17 |
| M 90×2 | 108 | 120 | 16 | 10 | 4 | 0,56 | KM 18 | MB 18 | HN 18 |
| M 95×2 | 113 | 125 | 17 | 10 | 4 | 0,66 | KM 19 | MB 19 | HN 19 |
| M 100×2 | 120 | 130 | 18 | 10 | 4 | 0,70 | KM 20 | MB 20 | HN 20 |
| M 105×2 | 126 | 140 | 18 | 12 | 5 | 0,85 | KM 21 | MB 21 | HN 21 |
| M 110×2 | 133 | 145 | 19 | 12 | 5 | 0,97 | KM 22 | MB 22 | HN 22 |
| M 115×2 | 137 | 150 | 19 | 12 | 5 | 1,00 | KM 23 | MB 23 | 718909 |
| M 120×2 | 138 | 155 | 20 | 12 | 5 | 1,10 | KM 24 | MB 24 | 718909 |
| M 125×2 | 148 | 160 | 21 | 12 | 5 | 1,20 | KM 25 | MB 25 | 718909 |
| M 130×2 | 149 | 165 | 21 | 12 | 5 | 1,25 | KM 26 | MB 26 | 718909 |
| M 135×2 | 160 | 175 | 22 | 14 | 6 | 1,55 | KM 27 | MB 27 | 718909 |

Sumber : SKF, 1981

UNIVERSITAS
GADJAH MADA

**Pompa Pulp Pada Proses Bleacing Clorinasi**
Joko Sabar , Ir. Hermawan, M.Si.
**Universitas Gadjah Mada, 1998 | Diunduh dari http://etd.repository.ugm.ac.id/**

# Lampiran 14. Lanjutan

| Dimensions | | | | | | Mass | Designation | Appropriate locking washer | Impact spanner |
|---|---|---|---|---|---|---|---|---|---|
| G | $d_1$ | $d_3$ | B | b | h | | | | |
| mm | | | | | | kg | – | – | |
| M 140×2 | 160 | 180 | 22 | 14 | 6 | 1,55 | KM 28 | MB 28 | 718909 |
| M 145×2 | 172 | 190 | 24 | 14 | 6 | 1,80 | KM 29 | MB 29 | 718909 |
| M 150×2 | 171 | 195 | 24 | 14 | 6 | 2,00 | KM 30 | MB 30 | 718909, 718910 |
| M 155×3 | 182 | 200 | 25 | 16 | 7 | 2,30 | KM 31 | MB 31 | 718910 |
| M 160×3 | 182 | 210 | 25 | 16 | 7 | 2,60 | KM 32 | MB 32 | 718910 |
| M 165×3 | 193 | 210 | 26 | 16 | 7 | 2,70 | KM 33 | MB 33 | 718910 |
| M 170×3 | 193 | 220 | 26 | 16 | 7 | 2,80 | KM 34 | MB 34 | 718910 |
| M 180×3 | 203 | 230 | 27 | 18 | 8 | 3,05 | KM 36 | MB 36 | 718910 |
| M 190×3 | 214 | 240 | 28 | 18 | 8 | 3,40 | KM 38 | MB 38 | 718910 |
| M 200×3 | 226 | 250 | 29 | 18 | 8 | 3,70 | KM 40 | MB 40 | 718910, 718911 |
| Tr 205×4 | 232 | 250 | 30 | 18 | 8 | 3,40 | HML 41 T | – | 718910, 718911 |
| Tr 210×4 | 238 | 270 | 30 | 20 | 10 | 4,75 | HM 42 T | – | 718911 |
| Tr 215×4 | 242 | 260 | 30 | 20 | 9 | 3,70 | HML 43 T | – | 718911 |
| Tr 220×4 | 250 | 280 | 32 | 20 | 10 | 5,35 | HM 44 T | MB 44 | 718911 |
| Tr 230×4 | 260 | 290 | 34 | 20 | 10 | 5,80 | HM 46 T | – | 718911 |
| Tr 235×4 | 262 | 280 | 34 | 20 | 9 | 4,60 | HML 47 T | – | 718911 |
| Tr 240×4 | 270 | 300 | 34 | 20 | 10 | 6,20 | HM 48 T | MB 48 | 718911 |
| Tr 250×4 | 290 | 320 | 36 | 20 | 10 | 7,00 | HM 54 T | – | 718911 |
| Tr 260×4 | 300 | 330 | 36 | 24 | 12 | 8,55 | HM 52 T | MB 52 | 718912 |
| Tr 270×4 | 310 | 340 | 38 | 24 | 12 | 9,20 | HM 54 T | – | 718912 |
| Tr 280×4 | 320 | 350 | 38 | 24 | 12 | 10,0 | HM 56 T | MB 56 | 718912 |
| Tr 290×4 | 330 | 370 | 40 | 24 | 12 | 12,0 | HM 58 T | – | 718912 |
| Tr 310×5 | 350 | 390 | 42 | 24 | 12 | 13,5 | HM 62 T | – | 718912 |
| Tr 330×5 | 380 | 420 | 52 | 28 | 15 | 20,5 | HM 66 T | – | 718913 |
| Tr 345×5 | 384 | 410 | 45 | 28 | 13 | 11,5 | HML 69 T | – | 718913 |
| Tr 350×5 | 410 | 450 | 55 | 28 | 15 | 25,0 | HM 70 T | – | 718913 |
| Tr 370×5 | 430 | 470 | 58 | 28 | 15 | 28,0 | HM 74 T | – | 718913 |
| Tr 410×5 | 452 | 480 | 52 | 32 | 14 | 19,0 | HML 82 T | – | 718913 |

Sumber : SKF, 1981

UNIVERSITAS
GADJAH MADA
**Pompa Pulp Pada Proses Bleacing Clorinasi**
Joko Sabar , Ir. Hermawan, M.Si.
**Universitas Gadjah Mada, 1998 | Diunduh dari http://etd.repository.ugm.ac.id/**

# Lampiran 15. Kopling fles luwes

—B 1452—

Attached Table 1. Flexible Flanged Shaft Coupling

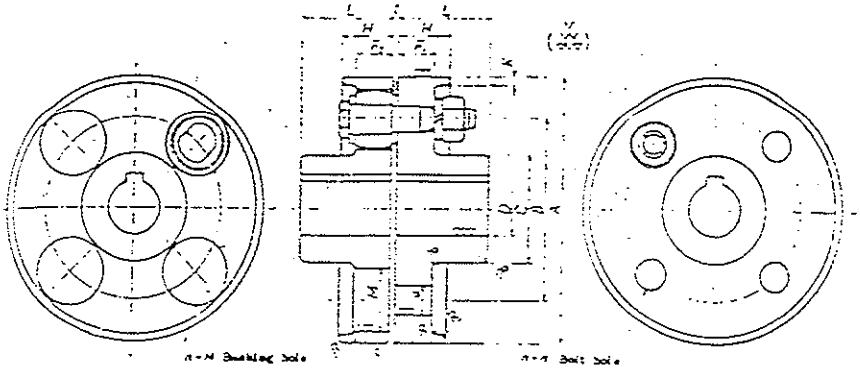


Remark: The bolt holes shall be arranged approximately symmetrically with respect to the key way.

Unit: mm

| Nominal diameter of coupling A | D: Largest shaft-hole diameter | D: Standard shaft-hole diameter | L | C | B | $F_1$ | $F_2$ | H | K | n (1) | a | M | t (2) | Reference: K | Reference: c | Reference: Diameter of bolt |
|---|---|---|---|---|---|---|---|---|---|---|---|---|---|---|---|---|
| 90 | 18 | — | 28 | 35.5 | 60 | 14 | 14 | 22 | 4 | 4 | 8 | 19 | 3 | 2 | 1 | 50 |
| 100 | 22 | — | 35.5 | 40 | 67 | 16 | 16 | 22.4 | 4 | 4 | 10 | 23 | 3 | 2 | 1 | 50 |
| 112 | 25 | 16 | 40 | 45 | 75 | 16 | 16 | 22.4 | 4 | 4 | 10 | 23 | 3 | 2 | 1 | 56 |
| 125 | 28 | 18 | 45 | 50 | 85 | 18 | 18 | 25 | 4 | 4 | 14 | 32 | 3 | 2 | 1 | 64 |
| 140 | 35 | 20 | 50 | 63 | 100 | 18 | 18 | 25 | 4 | 6 | 14 | 32 | 3 | 2 | 1 | 64 |
| 160 | 45 | 25 | 56 | 80 | 115 | 14 | 18 | 25 | 6 | 6 | 14 | 32 | 3 | 3 | 1 | 64 |
| 180 | 50 | 28 | 63 | 90 | 132 | 18 | 18 | 25 | 6 | 8 | 14 | 32 | 3 | 3 | 1 | 64 |
| 200 | 56 | 32 | 71 | 100 | 145 | 22.4 | 22.4 | 31.5 | 6 | 8 | 20 | 41 | 4 | 3 | 1 | 85 |
| 224 | 63 | 35 | 80 | 112 | 170 | 22.4 | 22.4 | 31.5 | 6 | 8 | 20 | 41 | 4 | 3 | 1 | 85 |
| 250 | 71 | 40 | 90 | 125 | 180 | 28 | 28 | 40 | 8 | 8 | 25 | 51 | 4 | 4 | 1 | 100 |
| 280 | 80 | 50 | 100 | 140 | 200 | 28 | 40 | 45 | 8 | 8 | 28 | 57 | 4 | 4 | 1 | 115 |
| 315 | 90 | 63 | 112 | 160 | 236 | 28 | 40 | 45 | 8 | 10 | 28 | 57 | 4 | 4 | 1 | 115 |
| 355 | 100 | 71 | 125 | 180 | 260 | 35.5 | 56 | 63 | 10 | 8 | 35.5 | 72 | 5 | 5 | 1 | 150 |
| 400 | 110 | 80 | 125 | 200 | 300 | 35.5 | 56 | 63 | 10 | 10 | 35.5 | 72 | 5 | 5 | 1 | 150 |
| 450 | 125 | 90 | 140 | 224 | 355 | 35.5 | 56 | 63 | 10 | 12 | 35.5 | 72 | 5 | 5 | 1 | 150 |
| 560 | 140 | 100 | 160 | 250 | 450 | 35.5 | 56 | 63 | 12 | 14 | 35.5 | 72 | 5 | 5 | 1 | 150 |
| 630 | 160 | 110 | 180 | 280 | 530 | 35.5 | 56 | 63 | 12 | 18 | 35.5 | 72 | 5 | 5 | 1 | 150 |

Notes (1) The letter n indicates the number of bush holes or bolt holes.
(2) The letter t indicates the clearance produced at the time of assembling the coupling bodies, and is equivalent to the thickness of coupling bolt washer.

Remarks 1. The drawn-out length of bolt indicates the dimension from the shaft end.
2. The screw hole to facilitate the drawing out of a coupling from a shaft is allowed to make optionally.

Sumber : JIS, 1981

UNIVERSITAS GADJAH MADA
**Pompa Pulp Pada Proses Bleacing Clorinasi**
Joko Sabar , Ir. Hermawan, M.Si.
**Universitas Gadjah Mada, 1998 | Diunduh dari http://etd.repository.ugm.ac.id/**

# Lampiran 16. Baut kopling



Attached Table 2. Coupling Bolt for Flexible Flanged Shaft Coupling

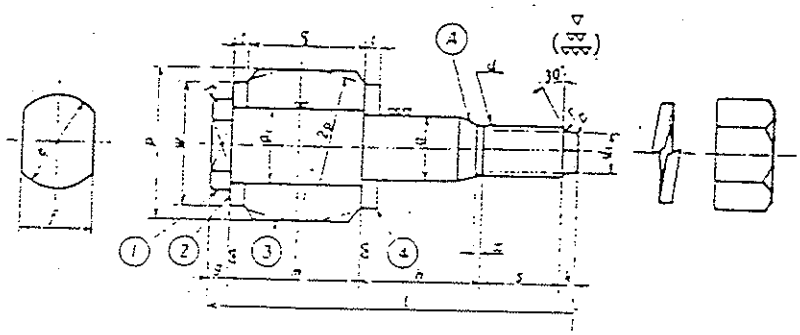

Unit: mm

| Dimension d×l | ① Bolt d | $d_1$ | a | $d_2$ | c | f | g | m | k | r | h | l | r (approx.) |
|---|---|---|---|---|---|---|---|---|---|---|---|---|---|
| × 50 | M 8 | 9 | 8 | 5.5 | 12 | 10 | 4 | 17 | 15 | 12 | 2 | 50 | 0.4 |
| × 56 | M 10 | 12 | 10 | 7 | 16 | 13 | 4 | 19 | 17 | 14 | 2 | 56 | 0.5 |
| × 64 | M 12 | 15 | 14 | 9 | 19 | 17 | 5 | 23 | 19 | 16 | 3 | 64 | 0.6 |
| × 85 | M 20 | 22.4 | 20 | 15 | 28 | 24 | 5 | 26.4 | 24.6 | 25 | 4 | 85 | 1 |
| ×100 | M 24 | 28 | 25 | 18 | 34 | 30 | 6 | 32 | 30 | 27 | 5 | 100 | 1 |
| ×116 | M 24 | 31.5 | 28 | 18 | 38 | 32 | 6 | 44 | 30 | 31 | 5 | 116 | 1 |
| 5×150 | M 30 | 40 | 35.5 | 22 | 48 | 41 | 8 | 61 | 38.5 | 36.5 | 6 | 150 | 1.2 |

| Dimension d×l | ② Washer $d_1$ | w | t | ③ Bushing $d_1$ | p | q | ④ Washer a | w | t |
|---|---|---|---|---|---|---|---|---|---|
| × 50 | 9 | 14 | 3 | 9 | 18 | 14 | 8 | 14 | 3 |
| × 56 | 12 | 18 | 3 | 12 | 22 | 16 | 10 | 18 | 3 |
| × 64 | 16 | 25 | 3 | 16 | 31 | 18 | 14 | 25 | 3 |
| × 85 | 22.4 | 32 | 4 | 22.4 | 40 | 22.4 | 20 | 32 | 4 |
| ×100 | 28 | 40 | 4 | 28 | 50 | 28 | 25 | 40 | 4 |
| ×116 | 31.5 | 45 | 4 | 31.5 | 56 | 40 | 28 | 45 | 4 |
| 5×150 | 40 | 56 | 5 | 40 | 71 | 56 | 35.5 | 56 | 5 |

Notes 1. The hexagon nuts shall be such that of Class 1 ordinary finish specified in JIS B 1181, of which strength class shall be 4 and thread accuracy 6 H (or Class 2).
2. The spring washers shall be No. 1 S specified in JIS B 1251.
3. The dimensions of width across flats are in accordance with JIS B 1002. The dimensional tolerance shall be of Class 2.
4. The shape and dimensions of the screw end shall be same as the half dog point specified in JIS B 1003.
5. The accuracy of the screw thread shall conform to 6 g (or Class 2) of JIS B 0209.
6. The portion (A) may be either tapered or terraced.
7. The length x may be constituted either by an incomplete-threads or by an under-cut for thread cutting. However, a length of approximately two threads shall be taken for x in the case of the incomplete-thread.
8. Bushing may be formed either to cylindrical shape or to spherical shape. When the bushing is of cylindrical shape both ends of external periphery shall be chamfered.
9. The bushing may provide metallic lining.

Sumber : JIS, 1981

Pompa Pulp Pada Proses Bleacing Clorinasi
Joko Sabar , Ir. Hermawan, M.Si.
Universitas Gadjah Mada, 1998 | Diunduh dari http://etd.repository.ugm.ac.id/

# Lampiran : 17. Dimensi utama ulir metrik

Unit : mm

| Designation of screw thread (1) | | | Pitch | Depth of thread engagement | Internal thread | | |
|---|---|---|---|---|---|---|---|
| | | | | | Major diameter | Pitch diameter | Minor diameter |
| | | | | | $D$ | $D_2$ | $D_1$ |
| | | | | | External thread | | |
| 1 | 2 | 3 | $P$ | $H_1$ | Major diameter $d$ | Pitch diameter $d_2$ | Minor diameter $d_1$ |
| M 1 | M 1.1 | | 0.25 | 0.135 | 1.000 | 0.838 | 0.729 |
| M 1.2 | | | 0.25 | 0.135 | 1.100 | 0.938 | 0.829 |
| | | | 0.25 | 0.135 | 1.200 | 1.038 | 0.929 |
| M 1.6 | M 1.4 | | 0.3 | 0.162 | 1.400 | 1.205 | 1.075 |
| | M 1.8 | | 0.35 | 0.189 | 1.600 | 1.373 | 1.221 |
| | | | 0.35 | 0.189 | 1.800 | 1.573 | 1.421 |
| M 2 | M 2.2 | | 0.4 | 0.217 | 2.000 | 1.740 | 1.567 |
| M 2.5 | | | 0.45 | 0.244 | 2.200 | 1.908 | 1.713 |
| | | | 0.45 | 0.244 | 2.500 | 2.208 | 2.013 |
| M 3×0.5 | M 3.5 | | 0.5 | 0.271 | 3.000 | 2.675 | 2.459 |
| M 4×0.7 | | | 0.6 | 0.325 | 3.500 | 3.110 | 2.850 |
| | | | 0.7 | 0.379 | 4.000 | 3.545 | 3.242 |
| M 5×0.8 | M 4.5 | | 0.75 | 0.406 | 4.500 | 4.013 | 3.688 |
| M 6 | | | 0.8 | 0.433 | 5.000 | 4.480 | 4.134 |
| | | | 1 | 0.541 | 6.000 | 5.350 | 4.917 |
| M 8 | | M 7 | 1 | 0.541 | 7.000 | 6.350 | 5.917 |
| | | M 9 | 1.25 | 0.677 | 8.000 | 7.188 | 6.647 |
| | | | 1.25 | 0.677 | 9.000 | 8.188 | 7.647 |
| M 10 | | M 11 | 1.5 | 0.812 | 10.000 | 9.026 | 8.376 |
| M 12 | | | 1.5 | 0.812 | 11.000 | 10.026 | 9.376 |
| | | | 1.75 | 0.947 | 12.000 | 10.863 | 10.106 |
| M 16 | M 14 | | 2 | 1.083 | 14.000 | 12.701 | 11.835 |
| | M 18 | | 2 | 1.083 | 16.000 | 14.701 | 13.835 |
| | | | 2.5 | 1.353 | 18.000 | 16.376 | 15.294 |
| M 20 | M 22 | | 2.5 | 1.353 | 20.000 | 18.376 | 17.294 |
| M 24 | | | 2.5 | 1.353 | 22.000 | 20.376 | 19.294 |
| | | | 3 | 1.624 | 24.000 | 22.051 | 20.752 |
| M 30 | M 27 | | 3 | 1.624 | 27.000 | 25.051 | 23.752 |
| | M 33 | | 3.5 | 1.894 | 30.000 | 27.727 | 26.211 |
| | | | 3.5 | 1.894 | 33.000 | 30.727 | 29.211 |
| M 36 | M 39 | | 4 | 2.165 | 36.000 | 33.402 | 31.670 |
| M 42 | | | 4 | 2.165 | 39.000 | 36.402 | 34.670 |
| | | | 4.5 | 2.436 | 42.000 | 39.077 | 37.129 |
| M 48 | M 45 | | 4.5 | 2.436 | 45.000 | 42.077 | 40.129 |
| | M 52 | | 5 | 2.706 | 48.000 | 44.752 | 42.587 |
| | | | 5 | 2.706 | 52.000 | 48.752 | 46.587 |
| M 56 | M 60 | | 5.5 | 2.977 | 56.000 | 52.428 | 50.046 |
| M 64 | | | 5.5 | 2.977 | 60.000 | 56.428 | 54.046 |
| | M 68 | | 6 | 3.248 | 64.000 | 60.103 | 57.505 |
| | | | 6 | 3.248 | 68.000 | 64.103 | 61.505 |

Note (1) Screw threads in column 1 shall preferentially be chosen and, if necessary, in column 2, and then in column 3.

Remark: Columns 1, 2 and 3 conform to the preferred order of selection for nominal diameter of ISO general purpose metric screw threads specified in ISO 261.

Sumber : JIS, 1981