UNIVERSITAS
GADJAH MADA
Vertical In - Line Process Pump
I Made Arya Swastika, Dr. Ir. Indarto, DEA.
Universitas Gadjah Mada, 1995 | Diunduh dari http://etd.repository.ugm.ac.id/

DAFTAR PUSTAKA

1. American Petroleum Institute, *API Standard 610 ; Centrifugal Pump for General Refinery Services,* 6th edition, Washington D.C., 1981.

2. American Society for Testing Material, *ASTM Standards on Petroleum Products and Lubricants,* Philadelphia, 1959.

3. Baumeister, T., *Marks' Standard Handbook for Mechanical Engineers,* 8th edition, McGraw-Hill Book Company, New York, 1979.

4. Church, A.H., *Centrifugal Pumps and Blowers,* Robert E. Krieger Publishing Company, New York, 1972.

5. Hydraulic Institute, *Hydraulic Institute Standards for Centrifugal, Rotary and Reciprocating Pumps,* 14th edition, Ohio, 1983.

6. Karassik, I.J., Krutzsch, W.C., Fraser, W.H., *Pump Handbook,* McGraw Hill Book Company, New York, 1976.

7. Khetagurov, M., *Marine Auxiliary Machinery and System,* Peace Publisher Moscow, Moscow, 19..

8. Khurmi, R.S., Gupta, J.K., *A Text Book of Machine Design,* MKS & SI Units, Eurasia Publishing House (Pvt) LTD., Ram Nagar, New Delhi, 1980.

9. KSB Aktiengesellschaft, *Centrifugal Pump Lexicon,* 3rd edition, Frankenthal (Pfalz), Federal Republic of Germany, 1990.

10. Lazarkiewicz, S., Troskolanski, A.T., *Impeller Pumps,* 1st edition, Wydawnictwa Naukowo- Techniczne, Warsawa, 1965.

11. Maxwell, J.B., *Data Book on Hydrocarbons,* 9th printing, Robert E. Krieger Co., Inc., New York, 1968.

12. SKF, *General Catalogue*

13. Stepanoff, A.J., *Centrifugal and Axial Flow Pumps,* 2th edition, John Wiley and Sons, New York, 1957.

14. Sularso, *Pompa dan Kompresor,* PT. Pradnya Paramita, Jakarta, 1983.

15. Sularso, Suga, K., *Dasar Perencanaan dan Pemilihan Elemen Mesin,* Cetakan keenam, PT. Pradnya Paramita, Jakarta, 1983.

UNIVERSITAS
GADJAH MADA

Vertical In - Line Process Pump
I Made Arya Swastika, Dr. Ir. Indarto, DEA.
Universitas Gadjah Mada, 1995 | Diunduh dari http://etd.repository.ugm.ac.id/

UNIVERSITAS
GADJAH MADA

Vertical In - Line Process Pump
I Made Arya Swastika; Dr. Ir. Indarto, DEA.
Universitas Gadjah Mada, 1995 | Diunduh dari http://etd.repository.ugm.ac.id/

LAMPIRAN

Vertical In - Line Process Pump
I Made Arya Swastika, Dr. Ir. Indarto, DEA.
Universitas Gadjah Mada, 1995 | Diunduh dari http://etd.repository.ugm.ac.id/

LAMPIRAN 1. PERHITUNGAN BERAT KOMPONEN BERPUTAR

PERHITUNGAN BERAT IMPELER

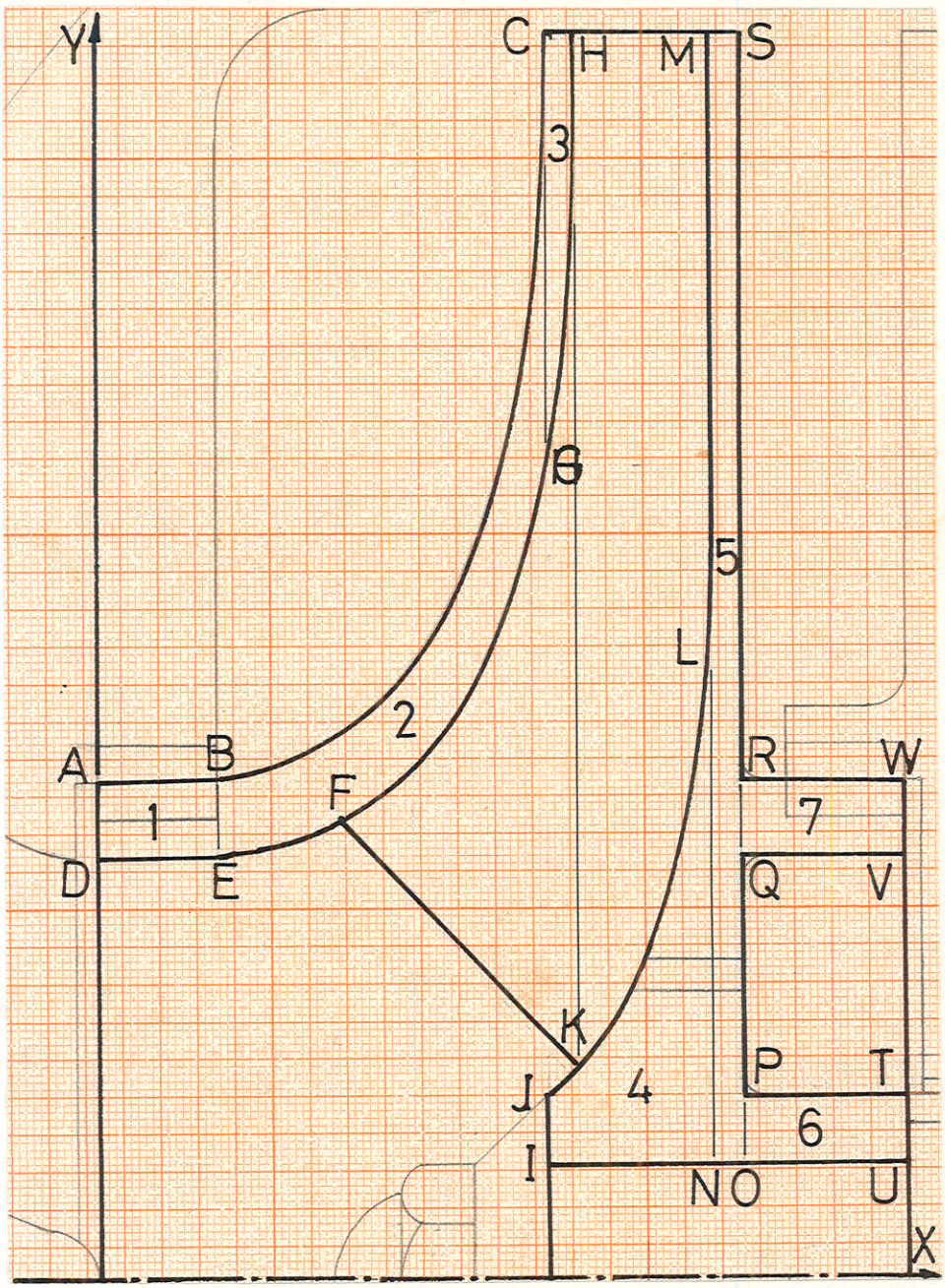

Vertical In - Line Process Pump
I Made Arya Swastika, Dr. Ir. Indarto, DEA.
Universitas Gadjah Mada, 1995 | Diunduh dari http://etd.repository.ugm.ac.id/

Menghitung Volume 'shroud' impeler

Daerah 1 (ABED) : x1 (AD) = 0 y1 (DE) = 57
x2 (EB) = 16 y2 (AB) = 67

Daerah 2 (BCHE) : x1 (EB) = 16 y1 (EH) = f (x)
x2 (CB) = 60 y2 (BC) = f (x)

Untuk mencari persamaan y1 pada daerah 2 ini, diasumsikan kurva EH adalah parabola dengan puncak di titik E (16,57) dan melalui titik H (64,167).

Misalkan persamaan parabolanya

$$y = ax^2 + bx + c$$

Titik puncak parabola ada di absis $x = -b/2a$ dan ordinat $y = (b^2-4ac)/-4a$

Berarti $16 = -b/2a$ atau $32a + b = 0$ i

$57 = (b^2-4ac)/-4a$ atau

$228a - 4ac + b^2 = 0$ ii

Pada titik H (64,167) berlaku

$167 = a64^2 + b.64 + c$ atau

$4096a + 64b + c = 167$ iii

Substitusi persamaan i ke persamaan ii dan iii menghasilkan

$228a - 4ac + 1024a^2 = 0$ iv

dan

$2048a + c - 167 = 0$ v

Vertical In - Line Process Pump
I Made Arya Swastika, Dr. Ir. Indarto, DEA.
Universitas Gadjah Mada, 1995 | Diunduh dari http://etd.repository.ugm.ac.id/

Substitusi persamaan iii ke persamaan iv :

$$228a - 4a\,(167 - 2048a) + 1024a^2 = 0$$

$$9216a^2 - 440a = 0$$

$$a = 440/9216$$
$$a = 0.0477$$

$$\longrightarrow \quad c = 167 - 2048a = 69.2222$$
$$b = -32a = -1.5278$$

Sehingga diperoleh persamaan parabola yang dimaksud :

$$y1 = 0{,}0477x^2 - 1{,}5278x + 69{,}2222$$

Cara yang sama dengan di atas digunakan untuk mencari persamaan parabola BC. Puncak parabola di titik B (16,67) dan melalui titik C (60,167)

Pada puncak parabola :

$$16 = -b/2a \quad \text{atau} \quad 32a + b = 0 \quad \ldots\ldots\ldots\ldots\ldots i$$

dan

$$67 = (b^2-4ac)/-4a \quad \text{atau}$$

$$268a - 4ac + b^2 = 0 \quad \ldots\ldots\ldots\ldots\ldots i$$

Di titik C (60,167) berlaku :

$$167 = a60^2 + b\,60 + c \quad \text{atau}$$

$$3600a^2 + 60b + c = 0 \quad \ldots\ldots\ldots\ldots$$

Substitusi i ke ii dan iii menghasilkan

$$268a - 4ac + 1024a^2 = 0 \quad \ldots\ldots\ldots\ldots iv$$

dan

$$1680a + c - 167 = 0 \quad \ldots\ldots\ldots\ldots v$$

Substitusi persamaan v ke persamaan iv :

$$268a - 4a\,(167 - 1680a) + 1024a^2 = 0$$

$$7744a^2 - 400a = 0$$
$$a = 400/1696$$
$$a = 0{,}0517$$

$$\longrightarrow \quad c = 167 - 1680 \,.\, 0{,}0157 = 80{,}2231$$
$$b = -32a = -1{,}6529$$

Vertical In - Line Process Pump
I Made Arya Swastika, Dr. Ir. Indarto, DEA.
Universitas Gadjah Mada, 1995 | Diunduh dari http://etd.repository.ugm.ac.id/

PERHITUNGAN BERAT POROS DAN KOMPONEN-KOMPONEN YANG MELEKAT P

Penampang poros pompa, kopling, poros motor, sleeve, mechani cap screw dan tab wash adalah seperti gambar di bawah ini.

Untuk memudahkan perhitungan diasumsikan luas penampang meli bagian 0-1, 2-3 dan 4-5 sama yaitu

$$D1 := 32 \quad mm$$

Penampang 1-2 dan 6-7 pada sleeve

$$D2 := 50 \quad mm$$

Penampang kopling 3-4

$$D3 := 42 \quad mm$$

Panjang masing-masing penampang adalah :

$$LD1 := 75 + 10 + 32 \qquad LD1 = 117$$

$$LD2 := 190 + 60 \qquad LD2 = 250$$

$$LD3 := 200 \qquad LD3 = 200$$

Dengan asumsi bahwa seluruh bagian benda adalah pejal dan te dari bahan yang sama yaitu 416 SS maka berat masing-masing b dapat dihitung. Massa jenis bahan poros adalah :

$$\rho Poros := 7.695 \cdot 10^{-6} \quad kg/mm3$$

Volume masing-masing bagian adalah :

$$VD1 := \frac{1}{4} \cdot \pi \cdot D1^2 \cdot LD1 \qquad VD1 = 9.40$$

Vertical In - Line Process Pump
Made Arya Swastika, Prof. Ir. Adaro, DEA
Universitas Gadjah Mada, 1995 | Diunduh dari http://etd.repository.ugm.id/

Sehingga persamaannya adalah :

$y2 = 0{,}0517x^2 - 1{,}6529x + 80{,}2231$

Daerah 3 (CGH) : x1 (CG) = 60
x2 (H) = 64
y1 (GH) = $0{,}0517x^2 - 1{,}6529x + 80{,}2231$
y2 (CH) = 167

Daerah 4 (IJLN) : x1 (IJ) = 60 y1 (IN) = 16
x2 (LN) = 82 y2 (JL) = f (x)

Dimisalkan y2 (JL) parabola yang melalui titik-titik J (60,2
K(64,29) dan L(82,100). Bila $y2 = ax^2 + bx + c$, maka pada

Titik J (60,25) : $25 = a\ 60^2 + b\ 60 + c$
$3600a + 60b + c = 25$ i

Titik K (64,29) : $29 = a\ 64^2 + b\ 64 + c$
$4096a + 64b + c = 29$ ii

Titik L (82,100) : $100 = a\ 82^2 + b\ 82 + c$
$67624a + 82b + c = 100$ iii

Eliminasi i dan ii mengasilkan :

$496a + 4b = 4$ iv

Eliminasi i dan iii menghasilkan :

$3124a + 22b = 75$ v

Eliminasi iv dan v menghasilkan :

$2728a + 22b = 22$
$3124a + 22b = 75$
$-$

$396a = 53$
$a = 0{,}1338$

--------> $b = 1 - 124 \cdot 0{,}1338 = -15{,}5960$
Dari i, ii atau iii $c = 478{,}9394$

Sehingga :

$y2 = 0.1338x^2 - 15{,}5960x + 478{,}9394$

Vertical In - Line Process Pump
I Made Arya Swastika, Dr. Ir. Indarto, DEA.
Universitas Gadjah Mada, 1995 | Diunduh dari http://etd.repository.ugm.ac.id/

Daerah 5 (QRWV) : x1 (QR) = 82 y1 (NO) = 16
x2 (OS) = 66 y2 (MS) = 167

Daerah 6 (OPUT) : x1 (OP) = 86 y1 (QV) = 16
x2 (UT) = 108 y2 (RW) = 25

Daerah 7 (QRWV) : x1 (QR) = 86 y1 (QV) = 57
x2 (WV) = 108 y2 (RW) = 67

Jumlah seluruh volume benda putar sama dengan volume 'shroud impeler. Integral volume benda putar masing-masing daerah di peroleh dengan rumus :

x1 := 1 x2 := 2 y1 := 1 y2 := 1

$$Vn := \int_{x1}^{x2} y2^2 - y1^2 \, dx$$

Daerah 1 :

$$V1 := \pi \cdot \int_{0}^{16} 67^2 - 57^2 \, dx$$

$$V1 = 6.23292 \cdot 10^4$$

Daerah 2 :

$$V2 := 3.48072 \cdot 10^5 \quad mm3$$

Daerah 3 :

$$V3 := \int_{64}^{60} 167^2 \cdot \pi - \left[0.0517 \cdot x^2 - 1.6529 \cdot x + 80.223\right]$$

$$V3 = 4.15952 \cdot 10^4 \quad mm3$$

Daerah 4 :

$$V4 := \int_{60}^{82} \left[0.1338 \cdot x^2 - 15.5960 \cdot x + 478.9394\right]^2 \cdot \pi -$$

$$V4 = 1.99562 \cdot 10^5 \quad mm3$$

Daerah
UNIVERSITAS
GADJAH MADA
Vertical In - Line Process Pump
I Made Arya Swastika, Dr. Ir. Indarto, DEA.
Universitas Gadjah Mada, 1995 | Diunduh dari http://etd.repository.ugm.ac.id/

$$V5 := \int_{82}^{86} \pi \cdot \left[167^2 - 16^2\right] dx$$

$$V5 = 3.47247 \cdot 10^5 \quad mm3$$

Daerah 6 :

$$V6 := \int_{86}^{108} \pi \cdot \left[25^2 - 16^2\right] dx$$

$$V6 = 2.55034 \cdot 10^4 \quad mm3$$

Daerah 7 :

$$V7 := \int_{86}^{108} \pi \cdot \left[67^2 - 57^2\right] dx$$

$$V7 = 8.57026 \cdot 10^4 \quad mm3$$

Volume ´shroud´ impeler :

$$Vshroud := V1 + V2 + V3 + V4 + V5 + V6 + V7$$

$$Vshroud = 1.11001 \cdot 10^6 \quad mm3$$

Menghitung Volume Sudu-sudu Impeler

Volume sebuah sudu ipeler dihitung dengan mengalikan luas da FHMK dengan tebal sudu rata-rata (s). Daerah FHMK dibagi men dua bagian FHK (A1) dan HKM (A2).

Daerah FHK dibatasi oleh :

x1 (F) = 33 y1 (FK) = f (Q)
x2 (HK) = 64 y2 (FH) = 0,0477x^2 + 1,5278x + 6

Vertical In - Line Process Pump
I Made Arya Swastika, Dr. Ir. Indarto, DEA
Universitas Gadjah Mada, 1995 | Diunduh dari http://etd.repository.ugm.ac.id/

y1 = ... garis lurus yang melalui titik F(33,6
titik K(64,29). Persamaan garisnya adalah :

$$y - 62 = \frac{62 - 29}{33 - 64} \left(x - 33 \right)$$

$$y1 = -1{,}0645x + 97{,}1290$$

Daerah HKM dibatasi oleh

x1 (HK) = 64 y1 (K) = 29
x2 (ML) = 82 y2 (HM) = 167

Luas masing-masing daerah dihitung dengan rumus integral :

$$An := \int_{x1}^{x2} y2 - y1 \, dx$$

Luas masing-masing daerah A1 (FHK) :

$$A1 := 2.03501 \cdot 10^{3}$$

Luas daerah A2 (HKM) :

$$A2 := \int_{64}^{82} 167 - 29 \, dx$$

$$A2 = 2.484 \cdot 10^{3}$$

Luas daerah FHMK :

$$Aa := A1 + A2$$

$$Aa = 4.51901 \cdot 10^{3}$$

Karena sudu-sudu melengkung ke belakang dengan sudut kelengk
rata-rata β=23,05 derajat maka luas FHMK perlu dibagi dengan
23.05. Luas total sebuah permukaan sudu impeler adalah :

$$A := \frac{A1 + A2}{\sin(23.05)}$$

$$AA := -A$$

Vertical In - Line Process Pump
I Made Ayu Swastika, Dr. Ir. Indarto, DEA.
Universitas Gadjah Mada, 1995 | Diunduh dari http://etd.repository.ugm.edu/

Dengan tebal sudu rata-rata s=0.1875 in (4.7625 mm), volume buah sudu pada impeler adalah :

$s := 4.7625$ mm

$Vsudu := 8 \cdot AA \cdot s$

$Vsudu = 1.97494 \cdot 10^{5}$ mm3

Berat Total Impeler

Bila V adalah volume total impeler :

$V := Vshroud + Vsudu$

$V = 1.30751 \cdot 10^{6}$ mm3

Maka berat total impeler dihitung dengan persamaan :

$Wi = \rho . g . V$

Dimana ρ adalah massa jenis bahan impeler. Bahan impeler ada cor Gr. 25 (ASTM A48 Gr.25A)

$\rho := 7.15 \cdot 10^{-6}$ kg/mm3

$g := 9.81$ m/s2

Berat Total Impeler :

$Wi := \rho \cdot g \cdot V$

$Wi = 91.71038$ newton

UNIVERSITAS
GADJAH MADA
Vertical In - Line Process Pump
I Made Arya Swastika, Dr. Ir. Indarto, DEA.
Universitas Gadjah Mada, 1995 | Diunduh dari http://etd.repository.ugm.ac.id/

$$VD2 := \frac{1}{4} \cdot \pi \cdot D2^2 \cdot LD2 \qquad VD2 = 4.90$$

$$VD3 := \frac{1}{4} \cdot \pi \cdot D3^2 \cdot LD3 \qquad VD3 = 2.77$$

Volume total poros dan bagian-bagiannya adalah :

$$VPoros := VD1 + VD2 + VD3$$

$$VPoros = 8.62059 \cdot 10^5 \quad mm3$$

Berat seluruh bagian benda tersebut adalah :

$$WPoros := \rho Poros \cdot g \cdot VPoros$$

$$WPoros = 65.07509 \quad newton$$

Berat Total Komponen Yang Berputar

Berat total komponen yang berputar akan merupakan tambahan g aksial bagi pompa.
Berat total komponen-komponen yang berputar adalah :

$$W := WImpeler + WPoros$$

$$W = 156.7855 \quad newton$$

Dalam satuan lbf berat totalnya adalah :

$$W := 0.2248 \cdot W$$

$$W = 35.24538 \quad lbf$$

UNIVERSITAS
GADJAH MADA

Vertical In - Line Process Pump
I Made Arya Swastika, Dr. Ir. Indarto, DEA.
Universitas Gadjah Mada, 1995 | Diunduh dari http://etd.repository.ugm.ac.id/

LAMPIRAN 2. LEMBARAN DATA API PROCESS

UNIVERSITAS
GADJAH MADA

Vertical In - Line Process Pump
I Made Arya Swastika, Dr. Ir. Indarto, DEA.
Universitas Gadjah Mada, 1995 | Diunduh dari http://etd.repository.ugm.ac.id/

Type W

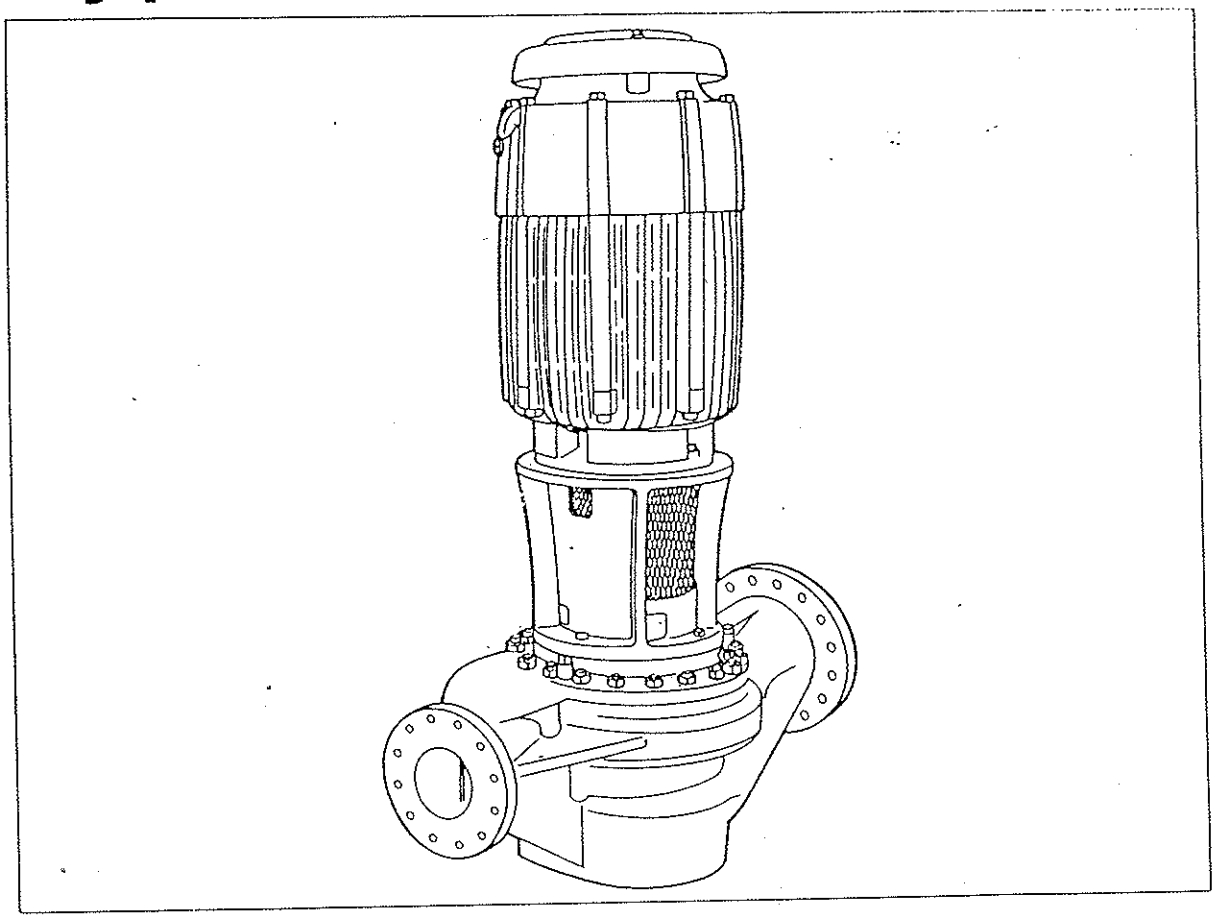

Flows to 5500 gpm (1250 m^3/hr)
Heads to 725 feet (220 m)
Temperatures from −300°F to 750°F (−185°C to 400°C)
Pressures to 1200 psig (82 bar)

Vertical In - Line Process Pump
I Made Arya Swastika, Dr. Ir. Indarto, DEA.
Universitas Gadjah Mada, 1995 | Diunduh dari http://etd.repository.ugm.ac.id/

terials Of Construction

UNIVERSITAS GADJAH MADA

rice	Non Corrosive	Non Corrosive	Mildly Corrosive	Corrosive	Corrosive	Corrosive
perature ° F	−20° to 500°	−20° to 500°	−20° to 800°	−20° to 800°	−20° to 750°	−20° to 750°
610 5th & 6th Edition rial Code	S1	—	S6	C6	—	A8
olumn	DR	DR-1	H	G	SR-6	SR-5
ng	Carbon Steel			12 Chrome	Stainless Steel	
ller	C.I.		12 Chrome		Stainless Steel	
d	C.I.	12 Chrome Hardened			Nitronic	S.S. Hard Faced
Part	Materials					
ng	Carbon Steel WCB			12 Chrome	316L S.S.	
ller	Cast Iron 25A		12 Chrome		316L S.S.	
Screw— ller	316 S.S.					
g—Stuffing Wear Ring	Cast Iron 30B	416 S.S. Hardened A			Nitronic 50	316L S.S.-HF
ller Wear Rings & Back Hub	Cast Iron 30B	416 (Mod) S.S. Hardened B			Nitronic 60	316L S.S.-HF
	416 S.S.				316 S.S.	
Sleeve n. Seal)	416 S.S.				316 S.S.	
Sleeve ed Box)	416 S.S. Hardened A				316L S.S.-HF	
n. Seal)	Carbon Steel WCB			316 S.S.		
Cage	Teflon					
ng Box ng	416 S.S.				316 S.S.	
ng Box sion	Carbon Steel WCB			12 Chrome	316L S.S.	
ort	Cast Iron 30B					
Plate	Carbon Steel WCB					

terial Specifications

General Description	Specification	General Description	Specification
Carbon Steel WCB	ASTM A216 Gr. WCB	Nitronic 60	UNS S 21800
Carbon Steel 4140	ASTM A322 Gr. 4140	Cast Iron 25A	ASTM A48 Gr. 25A
Carbon Steel 1020	ASTM A322 Gr. 1020	Cast Iron 30B	ASTM A48 Gr. 30B
12 Chrome	ASTM A743 Gr. CA-15	316L S.S.	ASTM A351 Gr CF3M
416 S.S.	ASTM A582 Type 416	316 S.S.	ASTM A479 Type 316
416 S.S. Hardened A	ASTM A582 Type 416 Hardened	316L S.S.-HF	Colmonoy #6/ASTM A479
416 S.S. Hardened B	ASTM A473 Type 416 Hardened	Aluminum	ASTM B26-74 Alloy 355
Nitronic 50	ASTM A351 CG6MMN	Bronze	ASTM B505 Gr. CA932

Vertical In - Line Process Pump
I Made Arya Swastika, Dr. Ir. Indarto, DEA.
Universitas Gadjah Mada, 1995 | Diunduh dari http://etd.repository.ugm.ac.id/

neering Information
lish Units)

Pump Size	Shaft Data Diameter			Stuffing Box Data				Casing Data			
								Auxiliary Connections			
	At Imp.	Under Mech. Seal	At Cplg.	Shaft O.D.	Bore I.D.	Depth	Dist. From Face to 1st Obst.	Vent	Drain	Gage	API Clr.
V	.938	1.375	1.00	1.750	2.50	3.125	2.250	.50	.75	.50	.017
7WL											
V											
VL											
VL											
VL											
8W											
VL					2.63	1.75	2.31				
VLH											
V					2.50	3.125	2.250				
V											
VL											
V	1.250	1.675	1.250	1.750	2.750	3.440	2.690				
W											
10W											
W											
W											
W	1.625	2.00	1.625	2.375	3.375	4.563	2.750				0.020
W	1.625	2.00	1.625	2.375	3.375	4.563	2.750				
W											
W											
W	1.625	2.00	1.625	2.50	3.56	4.563	5.50				
WH	1.625	2.00	1.625	2.50	3.75	3.125	5.50				
W	2.00	2.375	2.00	3.063	4.125	4.563	5.940				0.022
WH	2.00	2.375	2.00	3.063	4.125	3.125	5.940				
W	2.50	2.88	2.50	3.38	4.44	4.81	5.00	.75	.75	.50	.025

e: All dimensions given in inches.

Vertical In - Line Process Pump
I Made Arya Swastika, Dr. Ir. Indarto, DEA.
Universitas Gadjah Mada, 1995 | Diunduh dari http://etd.repository.ugm.ac.id/

ngineering Information
etric Units)

Pump Size	Shaft Data: Diameter: At Imp.	Shaft Data: Diameter: Under Mech. Seal	Shaft Data: Diameter: At Cplg.	Stuffing Box Data: Shaft O.D.	Stuffing Box Data: Bore I.D.	Stuffing Box Data: Depth	Stuffing Box Data: Dist. From Face to 1st Obst.	Casing Data: Auxiliary Connections: Vent	Casing Data: Auxiliary Connections: Drain	Casing Data: Auxiliary Connections: Gage	API Clr.
×7W	23.8	34.9	25.4	44.5	63.5	79.4	57.2	12.7	19.1	12.7	.432
½×7WL											
×7W											
×7WL											
×7WL											
×8WL											
½×8W											
×8WL											
×8WLH					66.8	44.5	58.7				
×8W					63.5	79.4	57.2				
×8W											
×8WL											
×9W	31.8	41.3	31.8	44.5	69.9	87.4	68.3				
×10W											
½×10W											
×10W											
×10W											
×11W	41.3	50.8	41.3	60.3	85.7	115.9	69.9				
×12W	41.3	50.8	41.3	60.3	85.7	115.9	69.9				.508
×12W											
×12W											
×15W	41.3	50.8	41.3	63.5	90.4	115.9	139.7				
×15WH	41.3	50.8	41.3	63.5	95.3	79.4	139.7				
×18W	50.8	60.3	50.8	77.8	104.8	115.9	150.9				.559
×18WH	50.8	60.3	50.8	77.8	104.8	79.4	150.9				
×20W	63.5	73.2	63.5	85.9	112.8	122.7	127.0	19.1	19.1	12.7	.635

tnotes: All dimensions given in millimeters.

Vertical In - Line Process Pump
I Made Arya Swastika, Dr. Ir. Indarto, DEA.
Universitas Gadjah Mada, 1995 | Diunduh dari http://etd.repository.ugm.gd.ac.id/

Dimensions And Weights
(English Units)

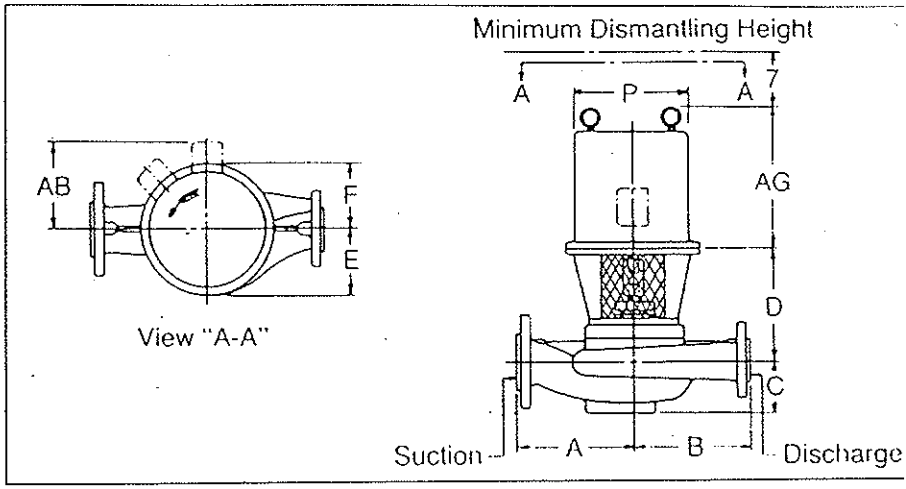

Approximate Dimensions—Do not use for construction(1)

Pump	Suct.	Disch.	A	B	C	D	E	F	P	AB	AG	Unit Wt.(2)
1×7W	2.0	1.0	9.00	9.00	4.00	16.75	5.75	4.75	15.12	12.38	26.88	445
1½×7WL	3.0	1.5	10.00	10.00	4.75	16.75	6.00	6.00	15.12	12.38	26.88	590
3×7W	4.0	3.0	11.00	11.00	5.25	16.88	6.00	6.00	17.38	14.12	30.62	700
3×7WL	4.0	3.0	12.00	12.00	5.50	17.00	6.50	5.75	19.62	15.12	34.38	840
4×7WL	6.0	4.0	15.00	15.00	6.75	17.12	10.00	6.25	19.62	16.25	34.38	1165
1×8WL	3.0	1.0	10.50	10.50	4.75	16.75	6.00	6.00	15.12	12.38	26.88	590
1½×8W	3.0	1.5	10.50	10.50	5.00	16.75	6.00	6.00	17.38	14.12	30.62	675
2×8WL	4.0	2.0	11.50	11.50	5.50	16.88	6.25	5.75	19.62	15.12	34.38	810
2×8WLH	4.0	2.0	12.50	12.50	6.00	17.19	6.50	6.00	19.62	15.38	34.38	860
3×8W	4.0	3.0	12.00	12.00	5.75	16.88	6.75	6.00	23.25	19.62	41.75	1030
4×8W	6.0	4.0	15.00	15.00	6.75	17.00	9.75	6.50	23.88	19.62	41.75	1475
4×8WL	6.0	4.0	15.00	15.00	7.00	17.12	9.75	7.50	23.88	19.62	41.75	1725
4×9W	6.0	4.0	16.50	16.50	7.50	18.00	10.38	7.31	23.88	19.62	41.75	2180
1×10W	3.0	1.0	12.00	12.00	4.50	17.50	7.25	7.25	19.62	15.12	34.38	79
1½×10W	3.0	1.5	12.00	12.00	5.00	17.50	6.50	6.25	23.25	19.62	41.75	104
3×10W	6.0	3.0	14.50	14.50	6.50	17.62	7.50	6.75	23.88	19.62	41.75	160
4×10W	6.0	4.0	16.50	16.50	7.75	17.75	10.00	7.00	23.88	19.62	41.75	214
4×11W	6.0	4.0	17.50	17.50	8.00	20.69	11.12	8.12	23.88	19.62	41.75	296
2×12W	4.0	2.0	15.00	15.00	6.00	20.44	8.75	8.75	23.88	19.62	41.75	226
3×12W	6.0	3.0	16.00	16.00	7.25	20.47	8.88	8.75	23.88	19.62	41.75	273
4×12W	6.0	4.0	18.00	18.00	8.00	20.50	11.12	8.75	23.88	19.62	41.75	287
6×15W	8.0	6.0	27.00	25.00	12.00	22.50	15.00	10.50	23.88	19.62	41.75	304
6×15WH	8.0	6.0	27.00	25.00	12.00	22.50	15.25	11.00	23.88	19.62	41.75	325
6×18W	10.0	6.0	30.00	28.00	14.62	23.94	17.00	12.38	26.75	21.38	63.75	447
6×18WH	10.0	6.0	30.00	28.00	14.62	23.94	17.38	12.38	26.75	21.38	63.75	495
8×20W	14.0	8.0	36.00	34.00	17.25	25.00	19.88	14.62	34.75	22.06	75.88	540

Footnotes: (1) All dimensions given in inches, weight in pounds.
(2) Unit weight includes pump and average size motor.

Vertical In - Line Process Pump
I Made Arya Swastika, Dr. Ir. Indarto, DEA.
Universitas Gadjah Mada, 1995 | Diunduh dari http://etd.repository.ugm.ac.id/

nensions And Weights
etric Units)

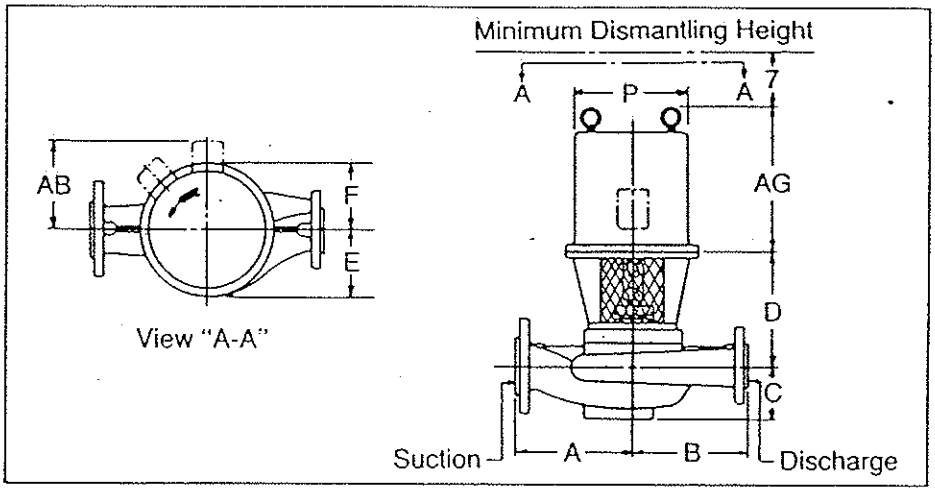

roximate Dimensions—Do not use for construction(1)

Pump	Suct. (in.)	Disch. (in.)	A	B	C	D	E	F	P	AB	AG	Unit Wt.(2)
7W	2.0	1.0	229	229	102	425	146	121	384	315	683	202
×7WL	3.0	1.5	254	254	121	425	153	153	384	315	683	268
7W	4.0	3.0	279	279	133	429	153	153	442	359	778	318
7WL	4.0	3.0	305	305	140	432	165	146	498	384	873	381
7WL	6.0	4.0	381	381	172	435	254	159	498	413	873	528
8WL	3.0	1.0	267	267	121	425	153	153	384	315	683	268
×8W	3.0	1.5	267	267	127	425	153	153	442	359	778	306
8WL	4.0	2.0	292	292	140	429	159	146	498	384	873	367
8WLH	4.0	2.0	318	318	153	437	165	153	498	391	873	390
8W	4.0	3.0	305	305	146	429	172	153	591	498	1061	467
8W	6.0	4.0	381	381	172	432	248	165	606	498	1061	669
8WL	6.0	4.0	381	381	178	435	248	191	606	498	1061	782
9W	6.0	4.0	419	419	191	457	264	186	606	498	1061	989
10W	3.0	1.0	305	305	114	445	184	184	498	384	873	358
×10W	3.0	1.5	305	305	127	445	165	159	591	498	1061	472
10W	6.0	3.0	368	368	165	448	191	172	606	498	1061	726
10W	6.0	4.0	419	419	197	451	254	178	606	498	1061	971
11W	6.0	4.0	445	445	203	526	282	206	606	498	1061	1343
12W	4.0	2.0	381	381	153	519	222	222	606	498	1061	1027
12W	6.0	3.0	406	406	184	520	225	222	606	498	1061	1238
12W	6.0	4.0	457	457	203	521	282	222	606	498	1061	1305
15W	8.0	6.0	686	635	305	572	381	267	606	498	1061	1379
15WH	8.0	6.0	686	635	305	572	387	279	606	498	1061	1474
18W	10.0	6.0	762	711	371	608	432	315	680	543	1619	2030
18WH	10.0	6.0	762	711	371	608	442	315	680	543	1619	2245
20W	14.0	8.0	914	837	438	635	505	371	883	560	1927	2449

otes: (1) All dimensions given in millimeters (except nozzle size, which is in inches), weight in kilograms.
(2) Unit weight includes pump and average size motor.

UNIVERSITAS
GADJAH MADA

Vertical In - Line Process Pump
I Made Arya Swastika, Dr. Ir. Indarto, DEA.
Universitas Gadjah Mada, 1995 | Diunduh dari http://etd.repository.ugm.ac.id/

LAMPIRAN 3. KONVERSI SATUAN

HYDRAULIC INSTITUTE
PREFERRED MEASUREMENT UNITS AND CONVERSION FACTORS

Quantity (1)	Typical Applications	U.S. Customary Unit	Abbrev. or Unit Symbol	Metric Unit	Unit Symbol	Conversion Factors U.S. to Metric	Conversion Factors Metric to U.S.
1. Space and Time							
plane angle		degree, minute, second	°, ′, ″	degree (decimalized)	°		
length	dimensions of sumps and pits	foot (and inch)	ft or ′	meter	m	0.3048*	3.281
			in or ″	meter	m	0.0254*	1/0.0254*
	mechanical engineering drawings	inch	in or ″	millimeter	mm	25.4*	1/25.4*
	coating thickness, surface finish, filter particle size	mil		micrometer	μm	25.4*	1/25.4*
		microinch	μin	micrometer	μm	0.0254*	1/0.0254*
		micron		micrometer	μm	1*	1*
area	surface area, flow area	square foot	ft^2	square meter	m^2	0.092 90	10.76
		square inch	in^2	square millimeter	mm^2	645.2	0.001 550
volume	fluid volume capacity	cubic inch	in^3	milliliter [cm^3] (2)	mL (3)	16.39	0.061 02
		cubic foot	ft^3	cubic meter	m^3	0.028 32	35.31
		gallon	gal	cubic meter	m^3	0.003785	264.2
		quart	qt	liter	L	0.9464	1.057
time		hour	h	h	h	1*	1*
		minute	min	min	min	1*	1*
		second	s	s	s	1*	1*
volume per unit time	flow rate of fluids	gallon per minute	gpm	cubic meter per hour	m^3/h	0.2271	4.403
		gallon per minute	gpm	liter per minute	L/min	3.785	0.2642
velocity, linear	fluid velocity	foot per minute	fpm	meter per second	m/s	0.005 08*	196.9
		foot per second	fps	meter per second	m/s	0.3048*	3.281
acceleration		foot per second-squared	ft/s^2	meter per second-squared	m/s^2	0.3048*	3.281
2. Periodic and Related Phenomena							
frequency	system vibration, sound, alternating current	cycle per second	c/s	hertz	Hz	1*	1*
speed of rotation		revolution per minute	rpm	revolution per minute	r/min	1*	1*

*Exact
(1) As used in ISO-31 and ISO-1000, "quantity" means "measurable property".
(2) Symbols in brackets, [ ], are explanatory only.
(3) The U.S. National Bureau of Standards has established the capital letter "L" as the preferred unit symbol for liter for the U.S.

UNIVERSITAS GADJAH MADA
Vertical In - Line Process Pump
I Made Arya Swastika, Dr. Ir. Indarto, DEA.
Universitas Gadjah Mada, 1995 | Diunduh dari http://etd.repository.ugm.ac.id/
metric conversion

Quantity	Typical Applications	U.S. Customary Unit	Abbrev. or Unit Symbol	Metric Unit	Unit Symbol	Conversion Factors U.S. to Metric	Conversion Factors Metric to U.S.
3. Mechanics							
mass	equipment mass (weight)	pound (decimalized; do not use ounces with pounds)	lb or #	kilogram	kg	0.4536	2.205
		ounce	oz	gram	g	28.35	0.035 27
unbalance	impeller, rotor	ounce-inch	oz·in	gram-millimeter	g·mm	720.1	0.001 389
density (mass density)	density of solids and fluids	pound per cubic foot	lb/ft^3	kilogram per cubic meter	kg/m^3	16.02	0.062 43
specific weight (force)	solids and fluids	pound force per cubic foot	lb/ft^3	kilonewton per cubic meter	kN/m^3	0.1571	6.366
moment of inertia (dynamic)	rotor inertia	pound foot-squared	$lb \cdot ft^2$	kilogram meter-squared	$kg \cdot m^2$	0.042 14	23.73
force		pound-force (decimalized; do not use ounces)	lbf	newton	N	4.448	0.2248
fluid energy	head of fluid	foot	ft	meter	m	0.3048*	3.281
moment of force, torque and bending moment	bolt tightening, shaft torque, beam stress and deflection calculations	pound-force foot	lbf·ft	newton-meter	N·m	1.356	0.7376
		pound-force inch	lbf·in	newton-meter	N·m	0.1130	8.851
pressure	fluid pressure or vacuum (NPSH)	pound-force per square inch [psi]	lbf/in^2	kilopascal [kN/m^2]	kPa	6.895	0.1450
		inch of mercury [60F]	inHg	kilopascal	kPa	3.377	0.2961
		inch of water [60F]	inH_2O	kilopascal	kPa	0.2488	4.019
	sound pressure level reference (1)	microbar [0.0002 μbar]	μbar	micropascal [20 μPa]	μPa	100 000	0.000 01
stress		pound-force per square inch [psi]	lbf/in^2	megapascal [MN/m^2] [N/mm^2]	MPa (2)	0.006 895	145.0
specific speed	centrifugal pump impeller	$\left[\frac{N\sqrt{Q}}{(h)^{3/4}}\right]$	$\frac{rpm\sqrt{gpm}}{ft^{3/4}}$		$\frac{r/min\sqrt{m^3/h}}{m^{3/4}}$	1.162	0.8608

*Exact
(1) The unit for sound level will continue to be the decibel (dB), and will continue to have the same value because 20μPa = 0.0002μbar.
(2) Except in very weak materials (for which kPa may be more convenient), or for modulus of elasticity (for which GPa will usually be more convenient).

Metric Conversion
Vertical In - Line Process Pump
I Made Arya Swastika, Dr. Ir. Indarto, DEA.
Universitas Gadjah Mada, 1995 | Diunduh dari http://etd.repository.ugm.ac.id/

HYDRAULIC INSTITUTE
PREFERRED MEASUREMENT UNITS AND CONVERSION FACTORS

Quantity	Typical Applications	U.S. Customary Unit	Abbrev. or Unit Symbol	Metric Unit	Unit Symbol	Conversion Factors U.S. to Metric	Conversion Factors Metric to U.S.
specific speed	centrifugal pump impeller	$\left[\frac{N\sqrt{Q}}{(h)^{3/4}}\right]$	$\frac{rpm\sqrt{gpm}}{ft^{3/4}}$	$\left[\frac{I.S.O.\ 2\pi N\sqrt{Q}}{(gh)^{3/4}}\right]$	unitless (radians)	0.000 3656	2735
viscosity, dynamic		centipoise	cP	millipascal-second	mPa·s	1*	1*
viscosity, kinematic		centistokes (1)	cSt	square-millimeter per second	mm^2/s	1*	1*
energy, work (see also heat and electricity)	force times distance	foot pound-force	ft·lbf	joule [N·m] (2)	J	1.356	0.7376
power (see also heat and electricity)	mechanical power	horsepower (550 ft·lbf/s)	hp	kilowatt [kJ/s] (2)	kW	0.7457	1.341
4. Heat							
temperature	temperature	degree Fahrenheit	°F	degree Celsius (3)	°C	$(t_F - 32) \times 5/9$*	$(t_C \times 1.8) + 32$*
	interval between two temperatures	degree Fahrenheit [Δt_F]	°F	kelvin ($\Delta t_K = \Delta t_C$)	K	5/9*	1.8*
heat (energy)		British thermal unit	Btu (4)	kilojoule	kJ	1.055	0.9478
heat flow rate (power)	heat rejection rate, air conditioning power	British thermal unit per minute	Btu/min	watt [(J/s)] (2)	W	17.58	0.05687
5. Electricity							
electric current		ampere	A	ampere	A	1*	1*
electromotive force	battery potential	volt	V	volt	V	1*	1*
electric resistance	resistors, conductors	ohm	ohm	ohm	Ω	1*	1*
conductance	conductors	mho	mho	siemens	S	1*	1*
energy		kilowatt-hour	kW·h	kilowatt-hour (5)	kW·h	1*	1*
power	motors	kilowatt	kW	kilowatt [kJ/s] or [kV·A]	kW	1*	1*

*Exact
(1) Conversion from Saybolt Universal Seconds to centistokes can be done from a table.
(2) By using J instead of N·m, the distinction from N·m for moment of force is made apparent.
(3) Conversion requires a formula, wherein the Fahrenheit temperature is indicated by t_F, and the Celsius temperature by t_C.
(4) All factors in this table are based on Btu-International Table.

UNIVERSITAS GADJAH MADA
Vertical In - Line Process Pump
I Made Arya Swastika, Dr. Ir. Indarto, DEA.
Universitas Gadjah Mada, 1995 | Diunduh dari http://etd.repository.ugm.ac.id/

UNIVERSITAS
GADJAH MADA

Vertical In - Line Process Pump
I Made Arya Swastika, Dr. Ir. Indarto, DEA.
Universitas Gadjah Mada, 1995 | Diunduh dari http://etd.repository.ugm.ac.id/

LAMPIRAN 4. PEMILIHAN BAHAN POMPA MENURUT API STANDARD 610

Table F-1—Material Classes for Centrifugal Pumps

CAUTIC Vertical In - Line Process Pump
I Made Arya Swastika, Dr. Ir. Indarto, DEA.
Universitas Gadjah Mada, 1995 | Diunduh dari http://etd.repository.ugm.ac.id/

This table is a general guide. It should not be used without a knowledgeable review of the specific services involved.

Service	On-Plot Process Plant	Off-Plot Transfer and Loading	Temperature Range (F)	Pressure Range (psig)	Material Class	Note Reference Number
Fresh water, condensate, cooling tower water	X	X	<212	All	I-1 or I-2	
Boiling water and process water	X	X	<250	All	I-1 or I-2	7
	X	X	250–350	All	S-5	7
	X	X	>350	All	D-6	7
Boiler feedwater						
Cast horizontally split	X	X	>200	All	C-6	
Forged barrel	X	X	>200	All	S-6	
Boiler circulator	X	X	>200	All	C-6	
Foul water, reflux drum water, water draw, and hydrocarbons containing these waters, including reflux streams	X	X	<350	All	S-3	2
Propane, butane, liquefied petroleum gas, and ammonia (NH_3)	X	X	<450	All	S-1	
Diesel oil; gasoline; naphtha; kerosine; gas oils; light, medium, and heavy lube oils; fuel oil; residuum; crude oil; asphalt; synthetic crude bottoms	X	X	<450	All	S-1	
	X		450–700	All	S-6	2,5
	X		>700	All	C-6	2
Noncorrosive hydrocarbons, e.g., catalytic reformate, isomaxate, desulfurized oils	X	X	450–700	All	S-4	5
Xylene, toluene, acetone, benzene, furfural, MEK, cumene	X	X	<450	All	S-1	
Sodium carbonate, doctor solution	X	X	<350	All	I-1	
Caustic (sodium hydroxide) concentration of 20% or less	X	X	<140	All	S-1	8
	X		140–200	All	S-3	8
	X		>200	All		6
MEA, DEA, TEA—stock solutions	X	X	<250	All	S-1	
DEA, TEA—lean solutions	X	X	<250	All	S-1	
MEA—lean solution (CO_2 only)	X	X	175–300	All	S-9	
MEA—lean solution (CO_2 and H_2S)	X	X	175–300	All		9
MEA, DEA, TEA—rich solutions	X	X	<175	All	S-1	
Sulfuric acid concentration						
85%	X	X	<100	All	S-1	2
85%–15%	X	X	<100	All	A-8	2
15%–1%	X	X	<100	All	A-8	2
1%	X	X	<450	All	A-8	2
Hydrofluoric acid concentration of over 96%	X	X	<150	All	S-9	2

NOTES:

1. The materials for pump parts for each material class are given in Appendix E.
2. The corrosiveness of foul waters, hydrocarbons over 450 F, acids, and acid sludges may vary widely. A materials recommendation should be obtained for each service. The material class indicated above will be satisfactory for many of these services but must be verified.
3. Cast iron cases, where recommended for chemical services, are for nonhazardous locations only. Use steel cases (S-1 or I-1) for pumps in services located near process plants or in any location where released vapor from a failure could create a hazardous situation or where pumps could be subjected to hydraulic shock, for example, in loading service.
4. Obtain separate materials recommendations for services not clearly identified by the service descriptions listed in this table.
5. If product corrosivity is low, Class S-4 materials may be used for services at 451–700 F. Obtain a separate materials recommendation in each instance.
6. Use Alloy 20 or Monel pump material and double mechanical seals with a pressurized seal oil system.
7. Consider oxygen content and buffering of water in the selection of material.
8. All welds should be stress relieved.
9. Use Class A-7 materials except for a carbon steel case.
10. Mechanical seal materials: For streams containing chlorides, all springs and other metal parts should be Alloy 20 or better. Buna-N and neoprene should not be used in any service containing aromatics. Viton should not be used in services containing aromatics above 200 F.